Delco

CHEVROLET RADIO MODEL 985332

CONVAIR Models 985158, 985159, 985189, and 985315 are practically identical to this 985332.

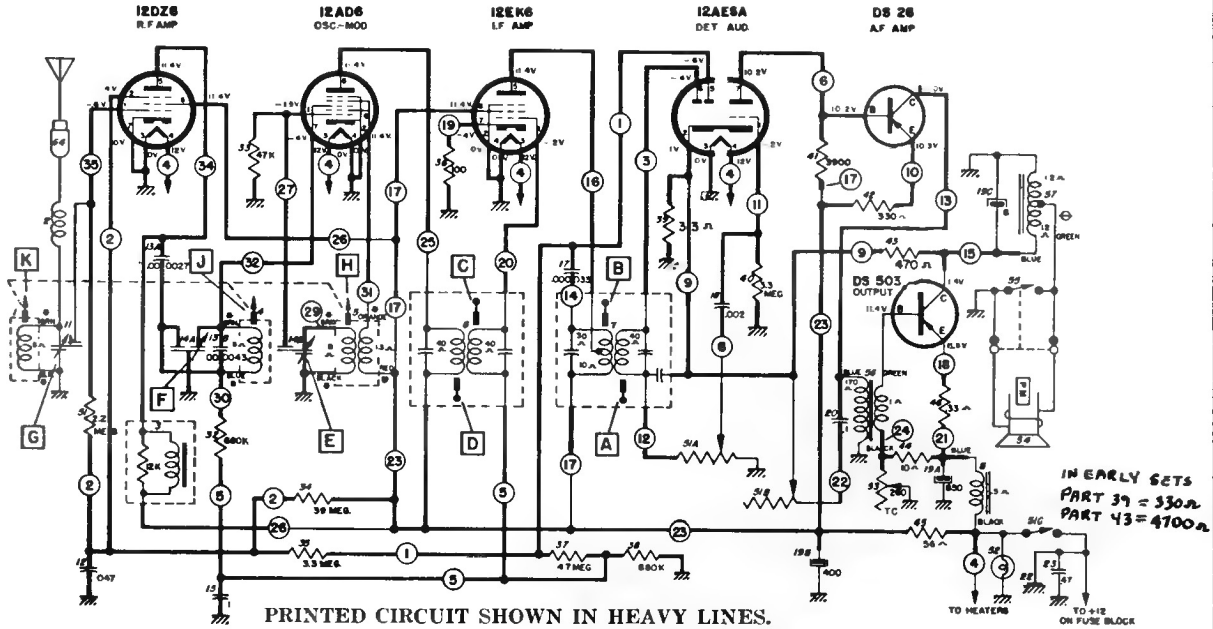

PRINTED CIRCUIT SHOWN IN HEAVY LINES.

VOLTAGES MEASURED TERMINAL TO CHASSIS WITH A VTVM—NO SIGNAL AND 12.0 VOLTS AT ILLUS. 22.

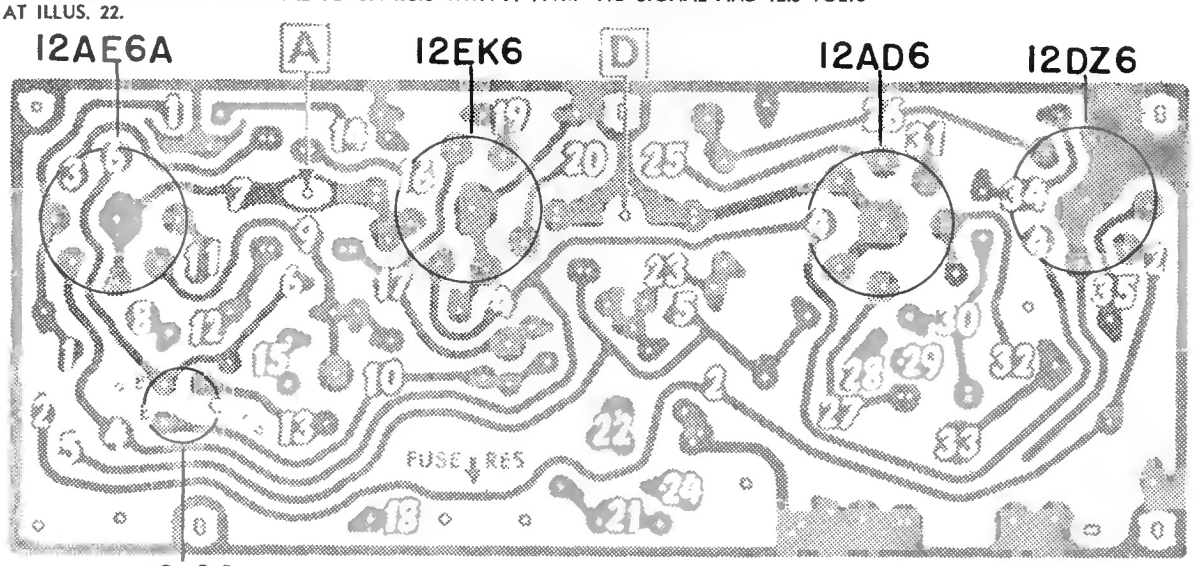

CIRCUIT BOARD (PRINTED VIEW)

STEPS	SERIES CAPACITOR OR DUMMY ANTENNA	CONNECT SIGNAL GENERATOR TO	SIGNAL GENERATOR FREQUENCY	TUNE RECEIVER TO	ADJUST IN SEQUENCE FOR MAX. OUTPUT
1	0.1 Mfd.	12AD6 Grid (Pin #7)	262 KC	High Frequency Stop	A, B, C, D,
2	0.000082 Mfd.	Antenna Connector	1615 KC	High Frequency Stop	*E, F, G,
3	0.000082 Mfd.	Antenna Connector	600 KC	Signal Generator Signal	J, K
4	0.000082 Mfd.	Antenna Connector	1615 KC	High Frequency Stop	F, G

*Before making this adjustment check mechanical setting of oscillator core "H." The rear of the core should be 1⅝" from the mounting end of the coil form. (This measurement is readily made by inserting a suitable plug in the mounting end of the coil form.) Core adjustment should be made with a non-metallic screwdriver.

With the radio installed and the car antenna plugged in adjust the antenna trimmer "G" for maximum volume with the radio tuned to a weak station between 600 and 1000 KC (see sticker on case).