CAUTION: COLLECTOR VOLTAGE OF DS-501 TRANSISTOR SHOULD BE MEASURED AT TRANSISTOR CASE (NOT AT THE HEAT RADIATOR).

Delco

BUICK Models 980462, 980464
CHEVROLET 985432, 985455, 985471
CORVAIR 985449, GMC Truck 2234003
OLDSMOBILE Model 982136
PONTIAC Models 983873, 983875
STUDEBAKER AC-3352, AC-3354, AC-3377

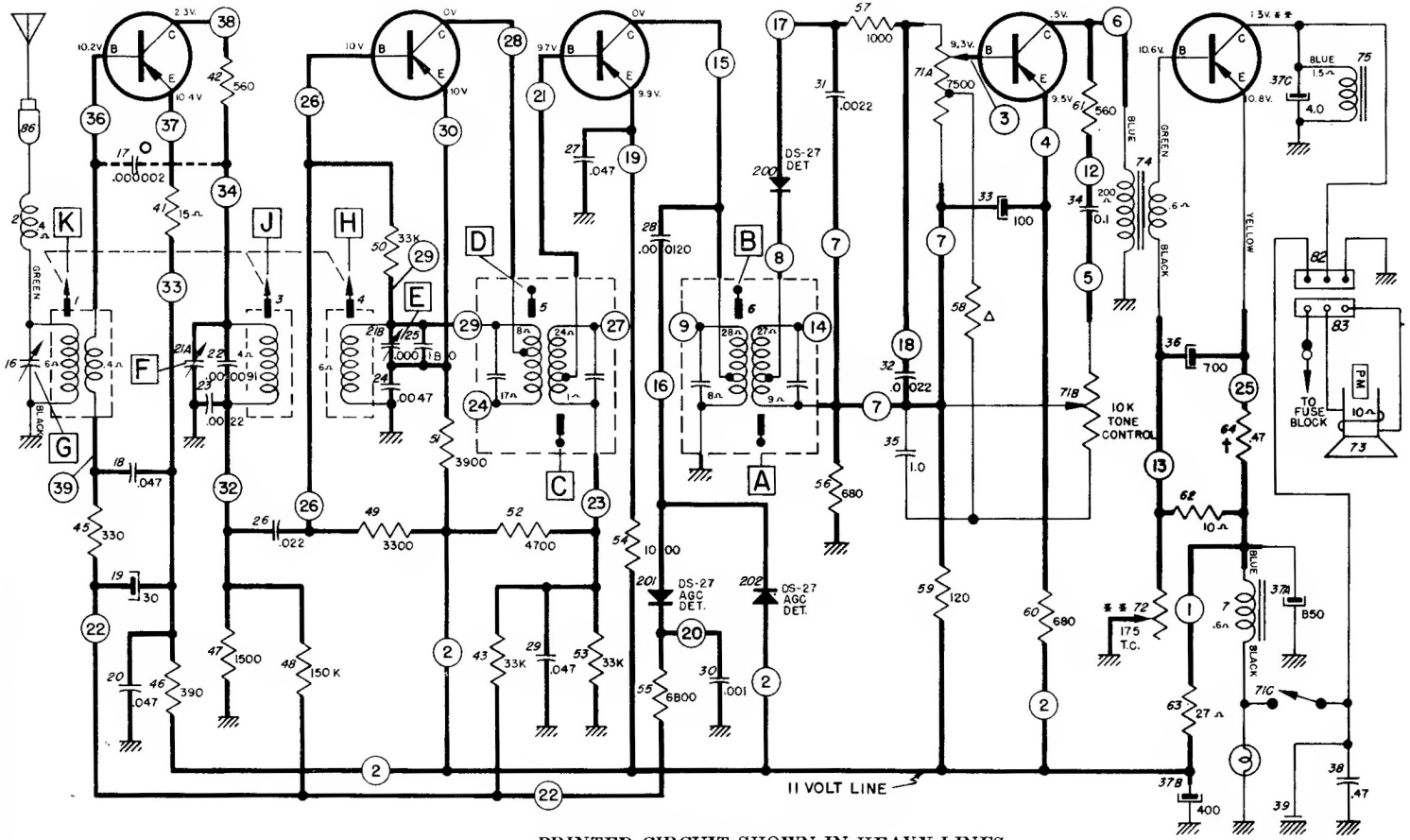

PRINTED CIRCUIT SHOWN IN HEAVY LINES.

Voltages measured terminal to chassis with a volt-ohm meter — no signal and 12 volts applied to radio.
Total battery drain 1.2 amps at 12 volts
Tolerance on voltage ±10%.
Before measuring transistor voltages, a 10 ohm speaker must be connected to radio.

** Voltage should be measured from power transistor case to ground. If power transistor is replaced, adjust bias potentiometer (Illus. #72) to obtain proper collector voltage with 12 volts applied to radio.

△ Resistor Illus. #58 is 330 ohms.

† Illus. #64 is a fuse resistor for the power transistor. Service with exact replacement.

○ Printed on circuit board.

CAUTION: Only a 10 ohm speaker should be used on this radio.

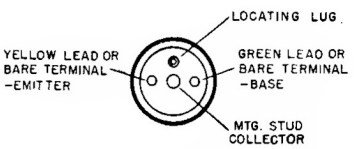

DS-501 Transistor Terminals

Note: Mtg. Insulators #1221807 not packaged with DS-501.

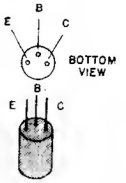

DS-22—Transistor Terminals
DS-24
DS-25
DS-26

ALIGNMENT PROCEDURE

A. C. Voltmeter—Across speaker voice coil.
Signal Generator—Connect capacitor (see chart below for value) in series with generator lead and connect to antenna terminal. Connect generator ground lead to chassis.
Volume control—Maximum volume
Radio Tuning Pointer—Extreme right end of dial.
Radio tuner cores—Rear of core 1⅜" from end of coil form. Adjustment is made using a plastic alignment tool marked 1⅜" from end.
Generator Output—Readable A.C. voltage (½ to 1 volt) across speaker voice coil
Proceed according to chart—

STEP	CAPACITOR	SIGNAL GENERATOR FREQUENCY	TUNE RECEIVER TO	ADJUST IN SEQUENCE
a.	.1 mfd.	262 KC	Hi freq. stop	A, B, C, D
b.	82 mmfd.	1615 KC	Hi freq. stop	E, F, G
c.	82 mmfd.	600 KC	Sig. Gen. Freq.	J, K
d.	82 mmfd.	1615 KC	Sig. Gen. Freq.	F, G
e.	82 mmfd.	900 KC	Sig. Gen. Freq.	Pointer Adjustment

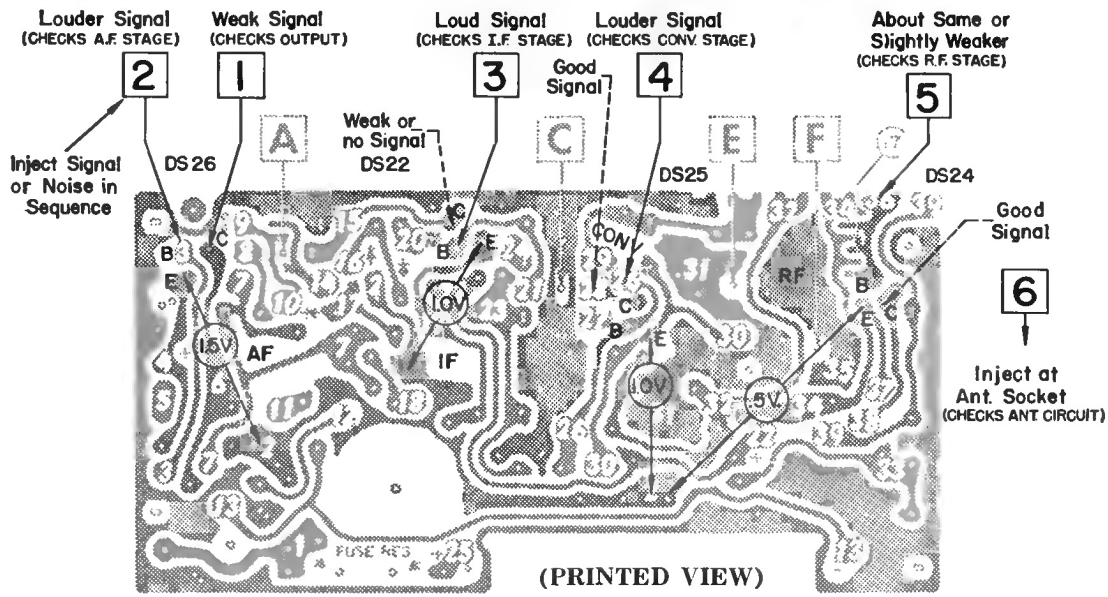

(PRINTED VIEW)

NUMBERS IN SQUARES ARE MAJOR TEST POINTS FOR STAGE ISOLATION—INJECT SIGNAL GENERATOR.

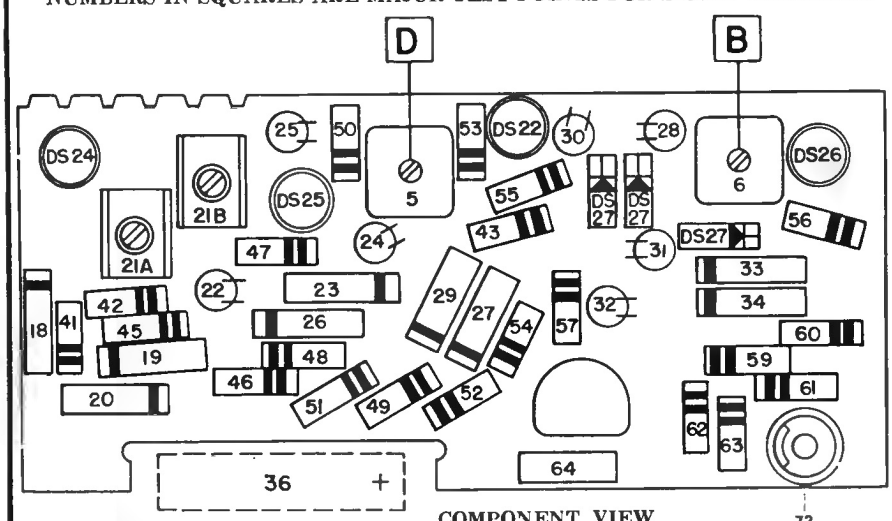

COMPONENT VIEW

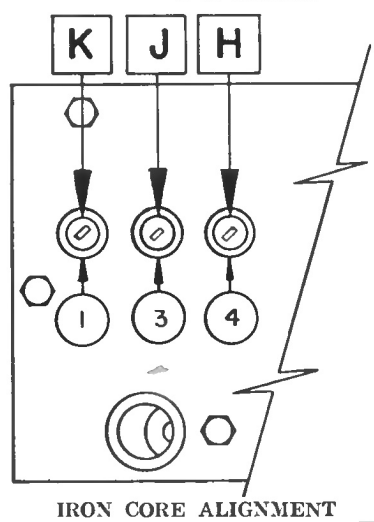

IRON CORE ALIGNMENT