Delco Radio

CHEVROLET Models 985431, 985453
CORVAIR Models 985447, 985443
OLDSMOBILE Model 982149
STUDEBAKER Models AC-3351, AC-3353
PONTIAC Model 983874

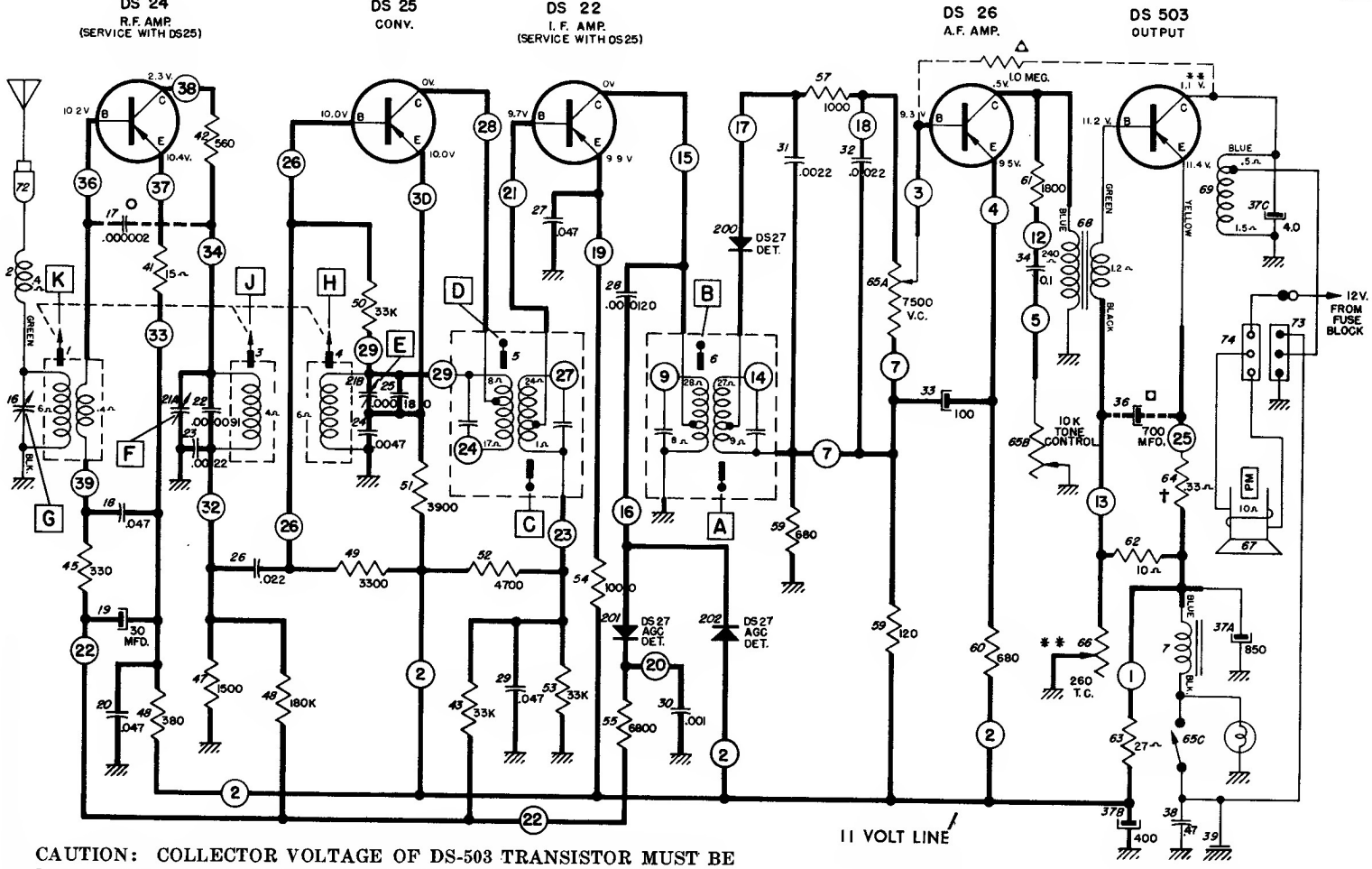

CAUTION: COLLECTOR VOLTAGE OF DS-503 TRANSISTOR MUST BE MEASURED AT TRANSISTOR CASE (NOT AT THE HEAT RADIATOR).

Voltages measured terminal to chassis with a volt-ohm meter — no signal and 12 volts applied to radio.
Total battery drain 1.2 amps at 12 volts
Tolerance on voltage ±10%.
Before measuring transistor voltages, a 10 ohm speaker must be connected to radio.

** Voltage should be measured from power transistor case to ground. If power transistor is replaced, adjust bias potentiometer (Ill. #66) to obtain proper collector voltage with 12 volts applied to radio.

† Illus. #64 is a fuse resistor for the power transistor. Service with exact replacement.

○ Printed on circuit board.

△ Will not appear in all radios.

□ Will not appear in all radios.

CAUTION: Only a 10 ohm speaker should be used on this radio.

PRINTED CIRCUIT SHOWN IN HEAVY LINES.

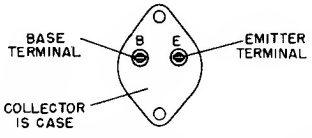

DS-503—Transistor Terminals

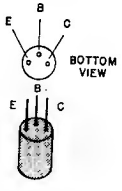

DS-26—Transistor
DS-22 Terminals
DS-25

Note: Mtg. Insulators #1221813 not packaged with DS-503.

ALIGNMENT PROCEDURE

A. C. Voltmeter—Across speaker voice coil.

Signal Generator—Connect capacitor (see chart below for value) in series with generator lead and connect to antenna terminal. Connect generator ground lead to chassis.

Volume control—Maximum volume

Radio Tuning Pointer—Extreme right end of dial.

Radio tuner cores—Rear of core 1⅜" from end of coil form. Adjustment is made using a plastic alignment tool marked 1⅜" from end.

Generator Output—Readable A.C. voltage (½ to 1 volt) across speaker voice coil

Proceed according to chart—

STEP	CAPACITOR	SIGNAL GENERATOR FREQUENCY	TUNE RECEIVER TO	ADJUST IN SEQUENCE
a.	.1 mfd.	262 KC	Hi freq. stop	A, B, C, D
b.	68 mmfd.	1615 KC	Hi freq. stop	E, F, G
c.	68 mmfd.	600 KC	Sig. Gen. Freq.	J, K
d.	68 mmfd.	1615 KC	Sig. Gen. Freq.	F, G
e.	68 mmfd.	900 KC	Sig. Gen. Freq.	Pointer Adjustment

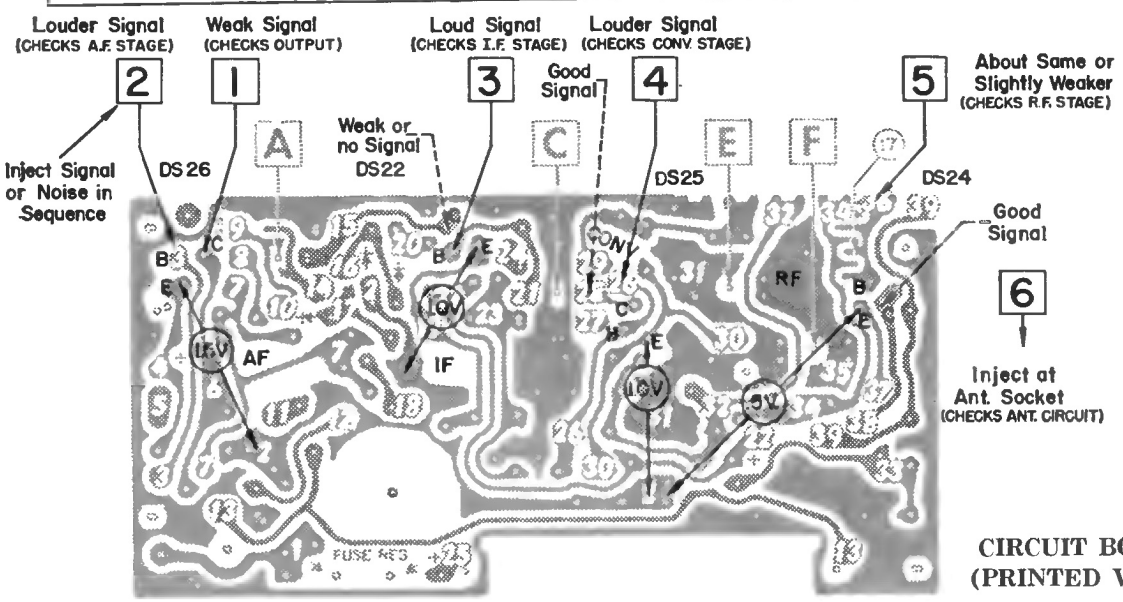

CIRCUIT BOARD (PRINTED VIEW)

NUMBERS IN SQUARES ARE MAJOR TEST POINTS FOR STAGE ISOLATION—INJECT SIGNAL GENERATOR.

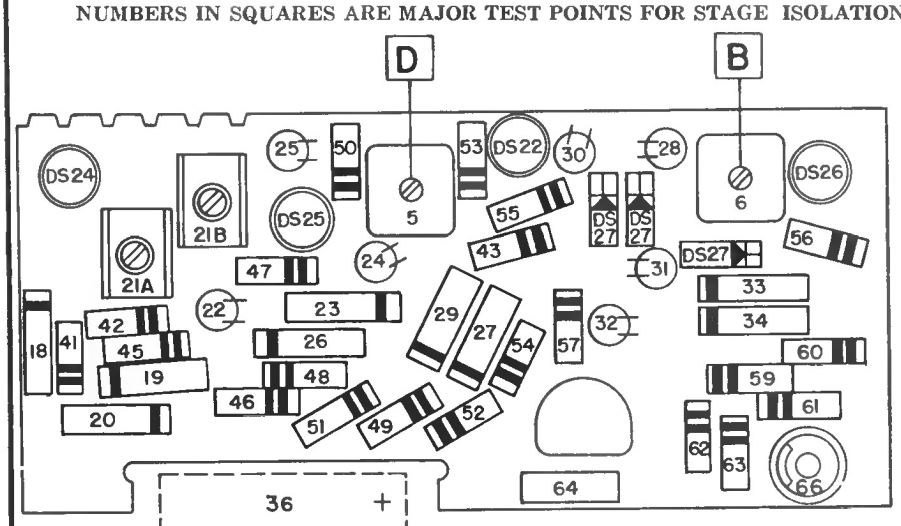

CIRCUIT BOARD COMPONENT VIEW

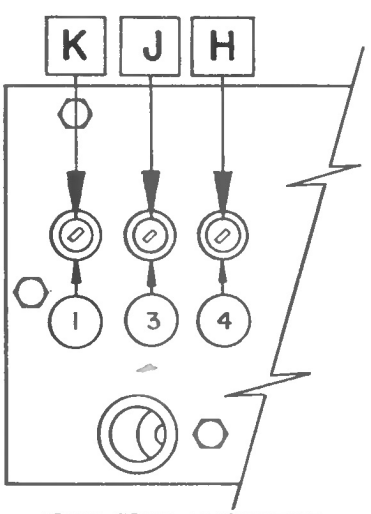

IRON CORE ALIGNMENT