DELCO

OLDSMOBILE DELUXE MODEL 989001

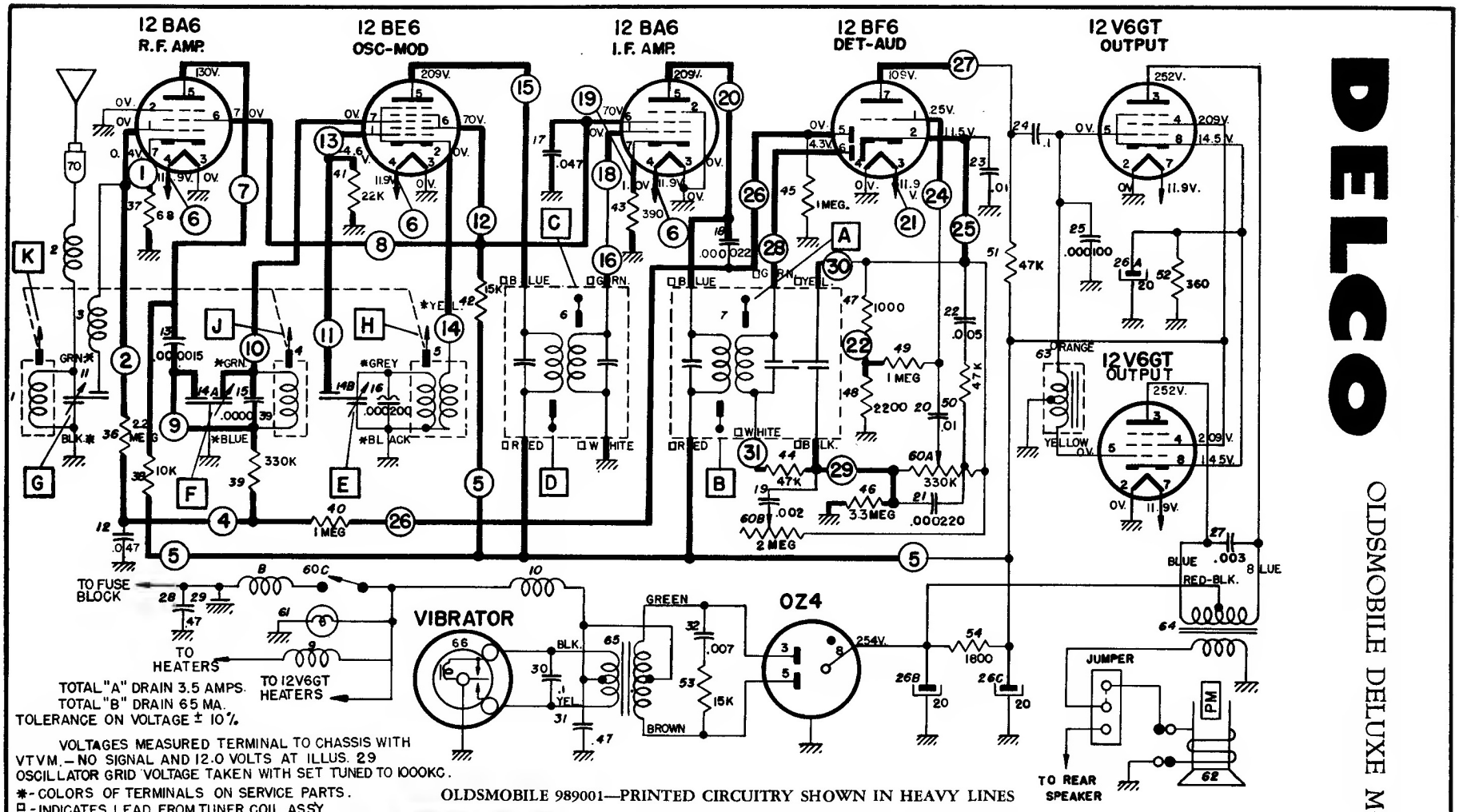

OLDSMOBILE 989001—PRINTED CIRCUITRY SHOWN IN HEAVY LINES

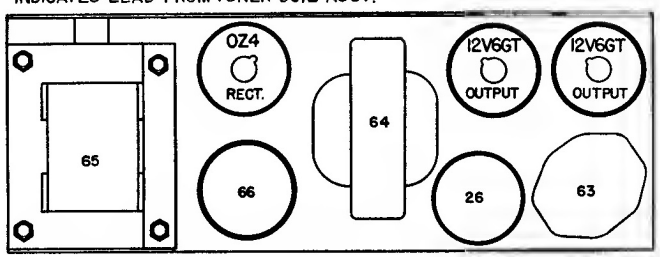

PARTS LAYOUT—TUBE VIEW (POWER SUPPLY)

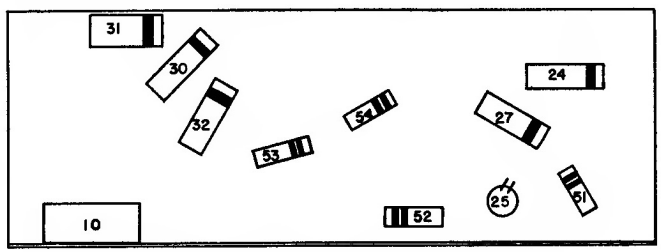

PARTS LAYOUT—CHASSIS VIEW (POWER SUPPLY)

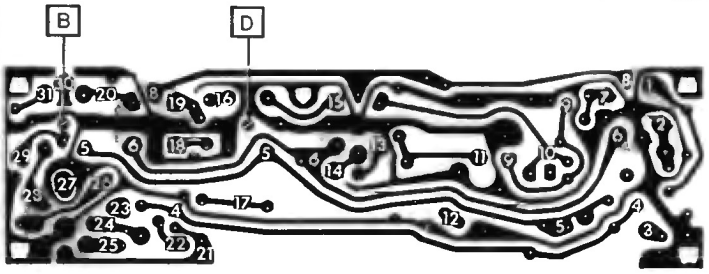

WHITE NUMBERS ON PRINTED CIRCUIT BOARD DRAWING CORRESPOND TO NUMBERS ENCIRCLED ON SCHEMATIC.

DELCO

OLDSMOBILE Model 989001

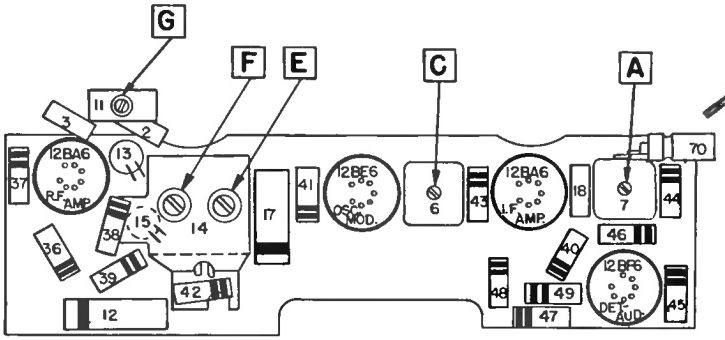

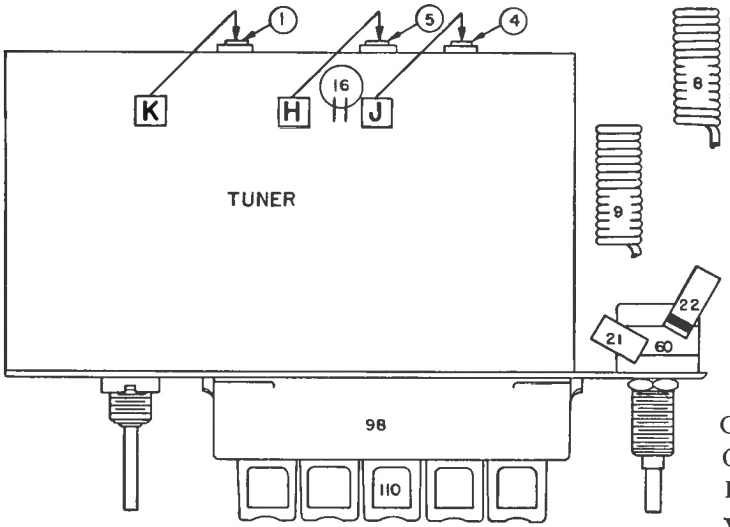

PARTS LAYOUT—TUBE VIEW

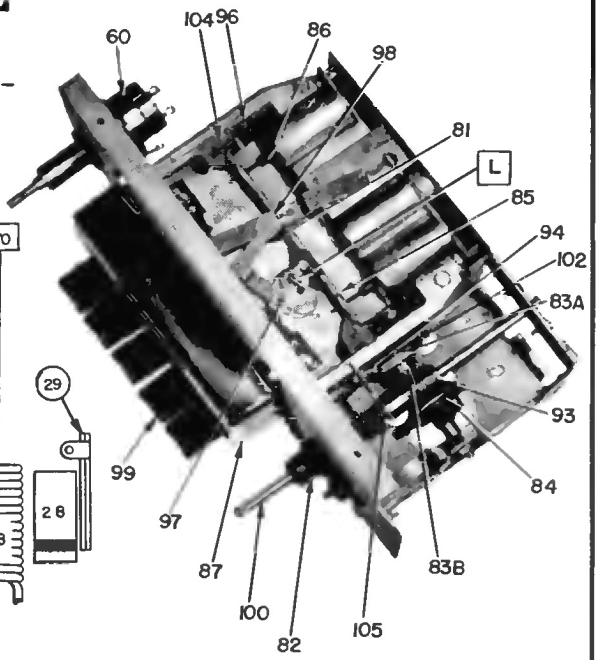

TUNER

PUSH BUTTON SETUP PROCEDURE

Pull Push Button to the left and out. Tune in desired station manually. Push button all the way in.

ALIGNMENT PROCEDURE

Output Meter Connections.....Across Voice Coil
Generator Return.....To Receiver Chassis
Dummy Antenna.....In Series With Generator
Volume Control Position.....Maximum Volume
Tone Control Position.....Treble Position
Generator Output.....Minimum for Readable Indication

Steps	Series Capacitor or Dummy Antenna	Connect Signal Generator to	Signal Generator Frequency	Tune Receiver to	Adjust in Sequence For Max. Output
1	0.1 Mfd.	12BE6 Grid (Pin #7)	262 KC	High Frequency Stop	A, B, C, D
2	0.000068 Mfd.	Antenna Connector	1615 KC	High Frequency Stop	*E, F, G
3	0.000068 Mfd.	Antenna Connector	600 KC	Signal Generator Signal	J, K
4	0.000068 Mfd.	Antenna Connector	1615 KC	High Frequency Stop	F, G
5	0.000068 Mfd.	Antenna Connector	1100 KC	Signal Generator Signal	L**

*Before making this adjustment check mechanical setting of oscillator core "H." The rear of the core should be 1⅝" from the mounting end of the coil form. (This measurement is readily made by inserting a suitable plug in the mounting end of the coil form.) Core adjustment should be made with a non-metallic screw driver.

**L is the pointer adjustment screw which is on the connecting link, between the pointer assembly and core guide bar (See tuner Dwg.). It should be adjusted so that when looking directly at the dial the pointer is on the 1100 KC mark. This setting is to give the correct relationship between the pointer and the dial when the radio is installed in a car. With the radio installed and the car antenna plugged in adjust the antenna trimmer "G" for maximum volume with the radio tuned to a weak station between 600 and 1000 KC (see sticker on case.)