DELCO

PONTIAC Model 988823
CHEVROLET Model 987730, CORVETTE #3748611, OLDSMOBILE 989129 are similar.

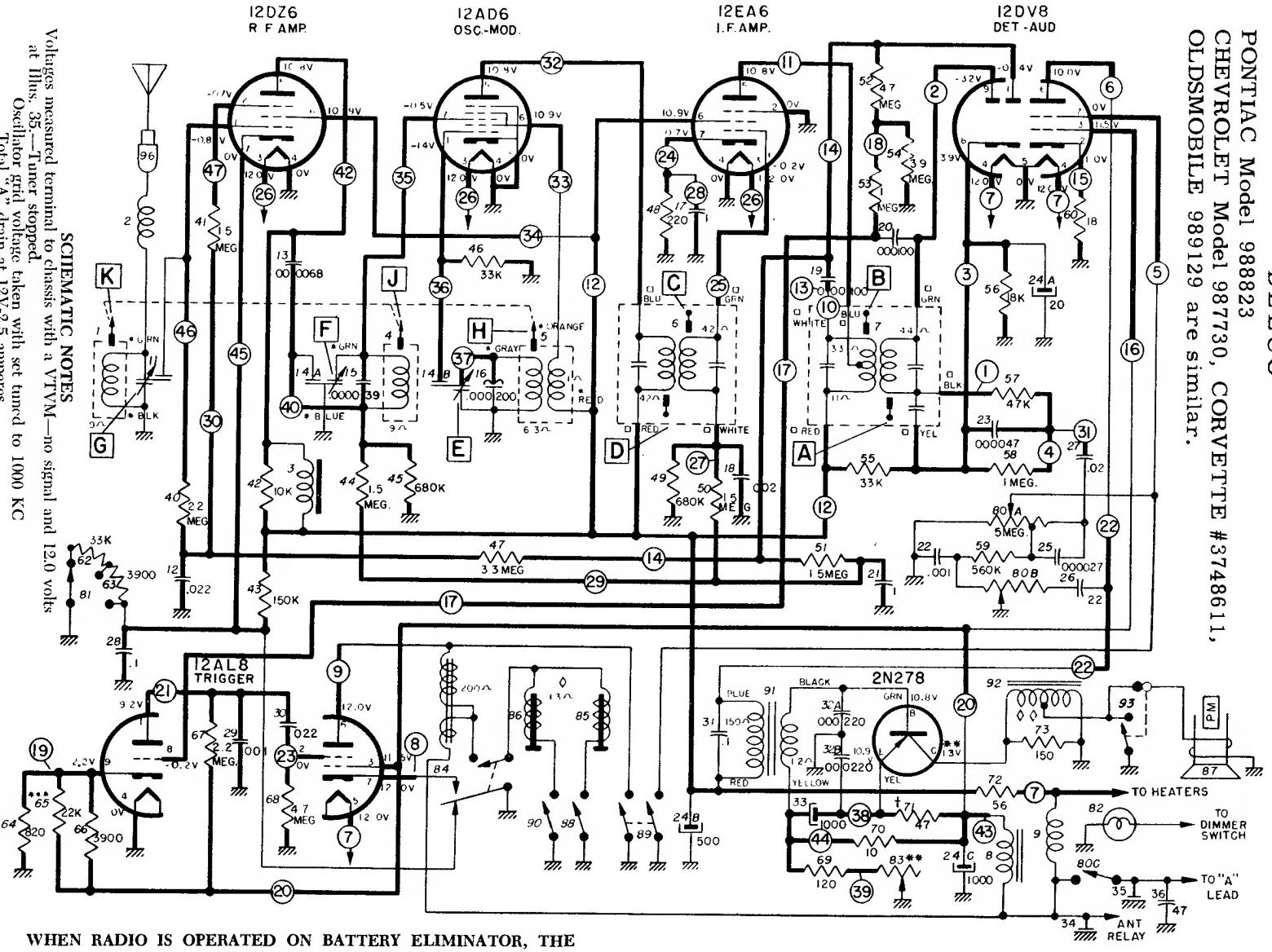

SCHEMATIC NOTES

Voltages measured terminal to chassis with a VTVM—no signal and 12.0 volts at Illus. 35.—Tuner stopped.

Oscillator grid voltage taken with set tuned to 1000 KC

Total "A" drain at 12V-2.5 amperes

Tolerance on all voltage ± 10%

□—Colors of terminals on service part.

*—Indicates lead from tuner coil assembly.

**—Before measuring transistor voltages, the shorting-type speaker socket must be opened and a 4 ohm speaker connected. If transistor is replaced, adjust bias potentiometer (Illus. 83) to obtain proper collector voltage with 12 volts input to radio.

***—Does not appear on all radios.

PUSHBUTTON SETUP PROCEDURE

1. Pull button to the left and out.
2. Tune in desired station manually.
3. Push button all the way in.

WHEN RADIO IS OPERATED ON BATTERY ELIMINATOR, THE TUNER MAY STOP SEEKING EVERY TIME A SOLENOID ENERGIZES, DUE TO VOLTAGE REGULATION.

Speaker socket, Illus. 93, is a shorting type to prevent transistor damage if speaker is disconnected. If not opened, radio will be very weak or dead.

PONTIAC MODEL 988823
PRINTED CIRCUIT SHOWN IN HEAVY LINES

†—Illus. 71 is a fuse resistor for the transistor. Value is .36 ohms at room temperature.

WHITE NUMBERS ON PRINTED CIRCUIT BOARD DRAWING CORRESPOND TO NUMBERS ENCIRCLED ON SCHEMATIC.

DELCO

PONTIAC Model 988823
CHEVROLET 987730, CORVETTE 3748611,
and OLDSMOBILE Model 989129
are similar.

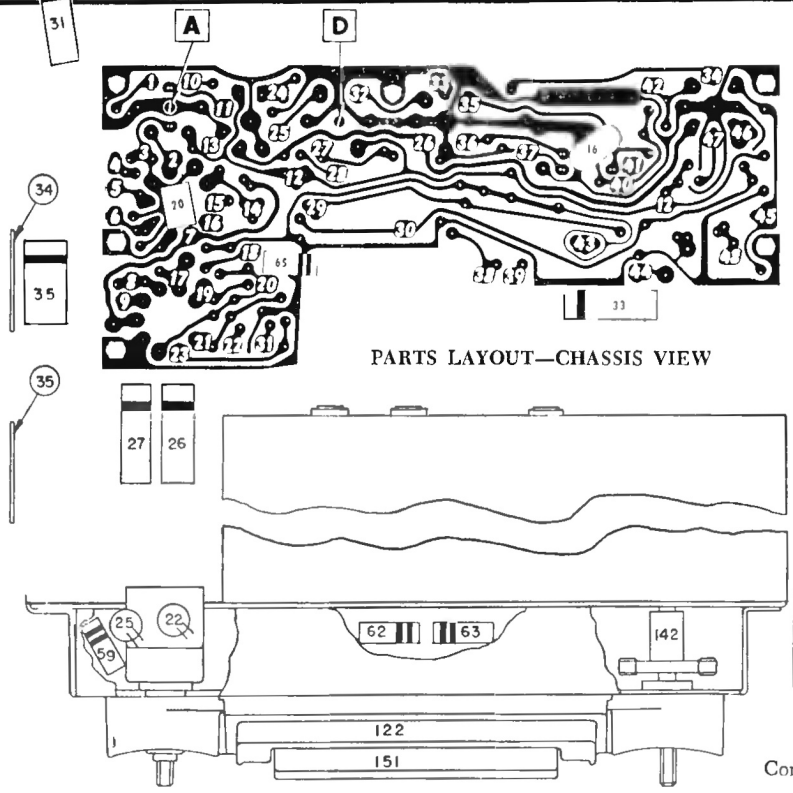

PARTS LAYOUT—CHASSIS VIEW

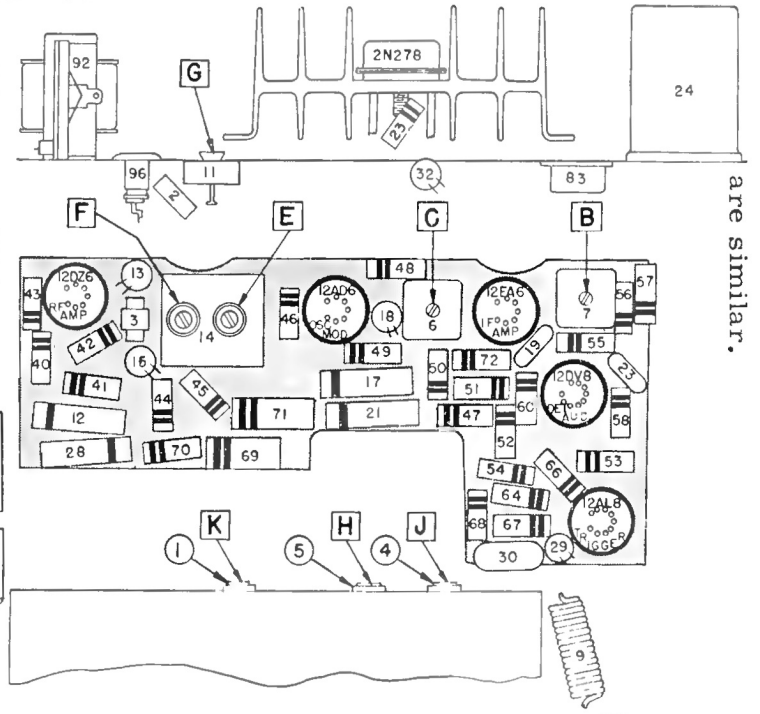

PARTS LAYOUT—TUBE VIEW

Connect vacuum tube voltmeter across speaker voice coil during alignment.

Step	Dummy Antenna	Connect To	Signal Generator Frequency	Tune Receiver To	Adjust in Sequence
1	0.1 Mfd.	12AD6 Grid (Pin 7)	262 KC	*High Frequency Stop	A, D, B, C (Max.)
2	.000068 Mfd.	Antenna Connector	1615 KC	High Frequency Stop	**E, F, G (Max.)
3	.000068 Mfd.	Antenna Connector	600 KC	Signal Generator Signal	J, K (Max.)
4	.000068 Mfd.	Antenna Connector	1400 KC	Signal Generator Signal	F, G (Max.)
5	.000068 Mfd.	Antenna Connector	1100 KC	Signal Generator Signal	***L

*To tune to high frequency, put a .070" feeler gauge in slot against the high frequency stop. Turn manual control to allow the treadle bar arm to run against the feeler gauge. This sets the dial near the point where the treadle solenoid switch closes.

**Before making this adjustment, check the setting of oscillator core "H." The rear of the core should be 1⅝" from the mounting end of the coil form. This measurement is readily made by inserting a suitable plug in the mounting end of the coil form. The core adjustment is made from the mounting end of the coil form with a non-metallic screw driver.

***"L" is the pointer adjustment which is on the connecting link, between the pointer assembly and core guide bar—adjust so pointer reads 1100 KC.

With the radio installed and the antenna plugged in, adjust the antenna trimmer "G" for maximum volume with the radio tuned to a weak station between 600 and 1000 KC (see sticker on case).

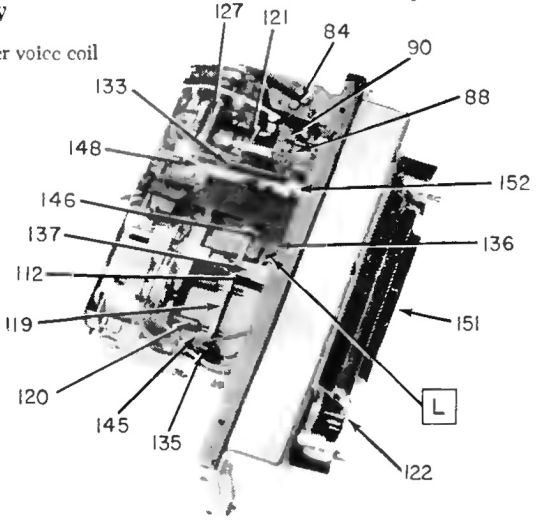

TUNER