DELCO

OLDSMOBILE 989171

Material below and the page adjacent at right is exact for Oldsmobile 989171. The following sets are practically the same electrically.

BUICK 981969,
CHEVROLET 987893,
PONTIAC 988977

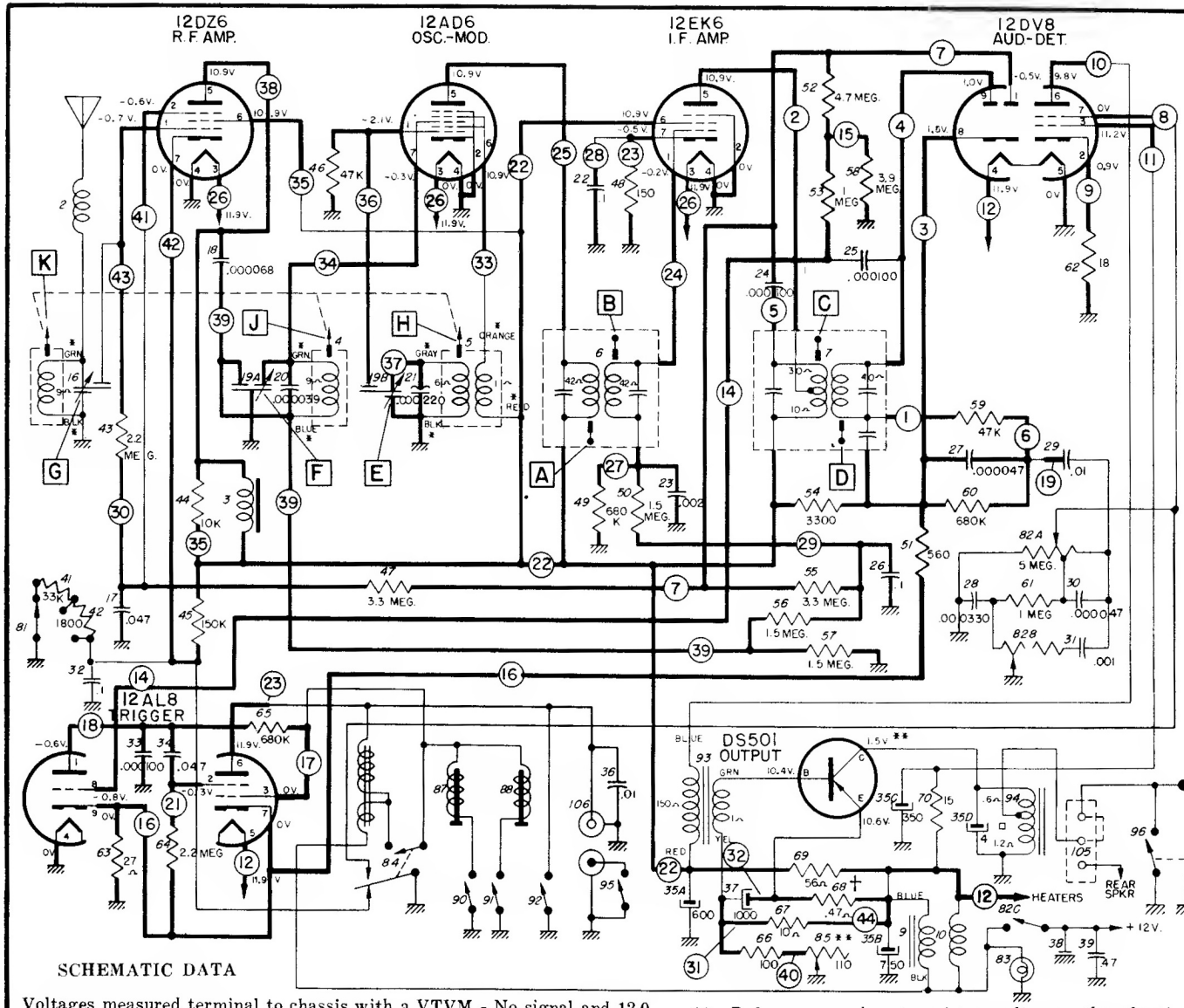

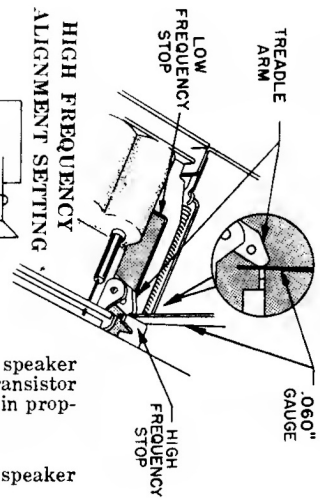

SCHEMATIC DATA

Voltages measured terminal to chassis with a VTVM - No signal and 12.0 volts at Illustration 38.

Oscillator grid voltage taken with set tuned to 1000 kc.

Total "A" drain at 12 volts - 2.6 amps.

Tolerance on voltages ±10%.

*—Indicates lead from tuner coil assembly.

**—Before measuring transistor voltages, the shorting type speaker socket must be opened and a 4 ohm speaker connected. If transistor is replaced, adjust bias potentiometer (Illustration 85) to obtain proper collector voltage with 12 volts input to radio.

+—Illustration 68 is a fuse resistor for the transistor.

□—Output transformer may appear shorted if shorting type speaker socket is not held open.

OLDSMOBILE 989171 PRINTED CIRCUIT SHOWN IN HEAVY LINES

DELCO OLDSMOBILE 989171 (Continued)

For list of similar models, see preceding page.

WHITE NUMBERS ON PRINTED CIRCUIT DRAWING CORRESPOND TO THE ENCIRCLED NUMBERS ON SCHEMATIC.

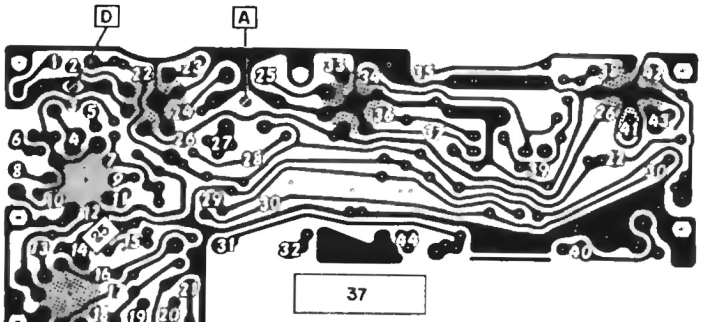

CIRCUIT BOARD—PRINTED VIEW

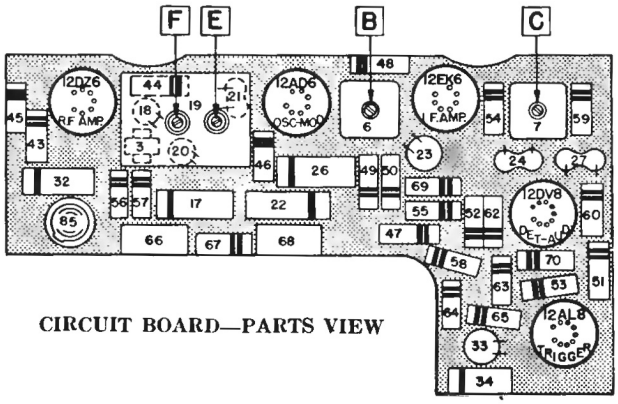

CIRCUIT BOARD—PARTS VIEW

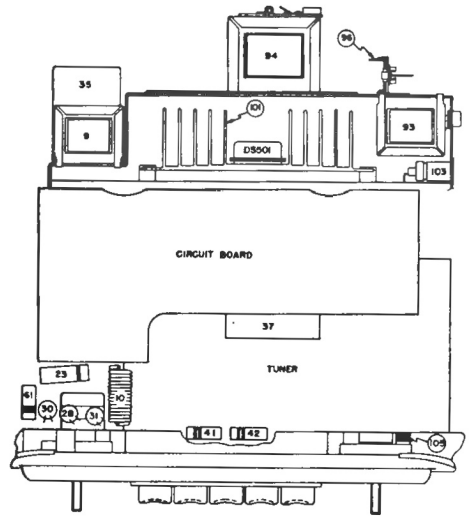

RECEIVER PARTS LAYOUT—TOP VIEW

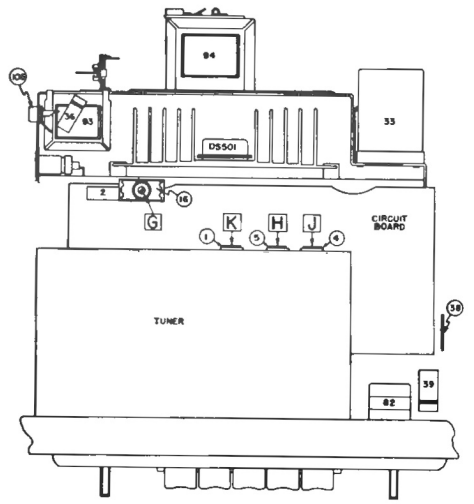

RECEIVER PARTS LAYOUT—BOTTOM VIEW

SIGNAL SEEKING TUNER ALIGNMENT PROCEDURE

NOTE: When aligning the signal seeker tuner type radio, be sure to use a vacuum tube voltmeter as indicated.

Output Meter Connection.....VTVM from AVC line (#27 Island-Circuit Board) To Chassis

Generator Return.....Receiver Chassis

Dummy Antenna.....In Series With Generator

Sensitivity Control.....Maximum

Volume Control.....Maximum Volume

Tone Control.....Treble

Generator Output.....Not to exceed 2 volts at VTVM

STEP	DUMMY ANTENNA	CONNECT SIGNAL GENERATOR TO	SIGNAL GENERATOR FREQUENCY	TUNE RECEIVER TO	ADJUST IN SEQUENCE FOR OUTPUT INDICATED
1	0.1 Mfd.	12AD6 Grid (Pin 7)	262 KC	*High Frequency Stop	A, B, C (Max.), D (Min.)
2	.000068 Mfd.	Antenna Connector	1615 KC	High Frequency Stop	**E, F, G (Max.)
3	.000068 Mfd.	Antenna Connector	600 KC	Signal Generator Signal	J, K (Max.)
4	.000068 Mfd.	Antenna Connector	1615 KC	Signal Generator Signal	F, G (Max.)
5	.000068 Mfd.	Antenna Connector	1100 KC	Signal Generator Signal	***L

*To tune to high frequency, put a .070" feeler gauge in slot against the high frequency stop. (See Page 30. Depress station selector bar and allow the treadle bar arm to run against the feeler gauge. Turn the radio off and then back on. This positions the tuner near the point where the treadle switch closes.

**Before making this adjustment, check the setting of oscillator core "H." The rear of the core should be 1⅝" from the mounting end of the coil form. This measurement is readily made by inserting a suitable plug in the mounting end of the coil form. The core adjustment is made from the mounting end of the coil form with a non-metallic screwdriver.

***"L" is the pointer adjustment slot on the pointer assembly—adjust so pointer reads 1100 KC.
With the radio installed and the antenna plugged in, adjust the antenna trimmer "G" for maximum volume with the radio tuned to a weak station between 600 and 1000 KC (see sticker on case.)