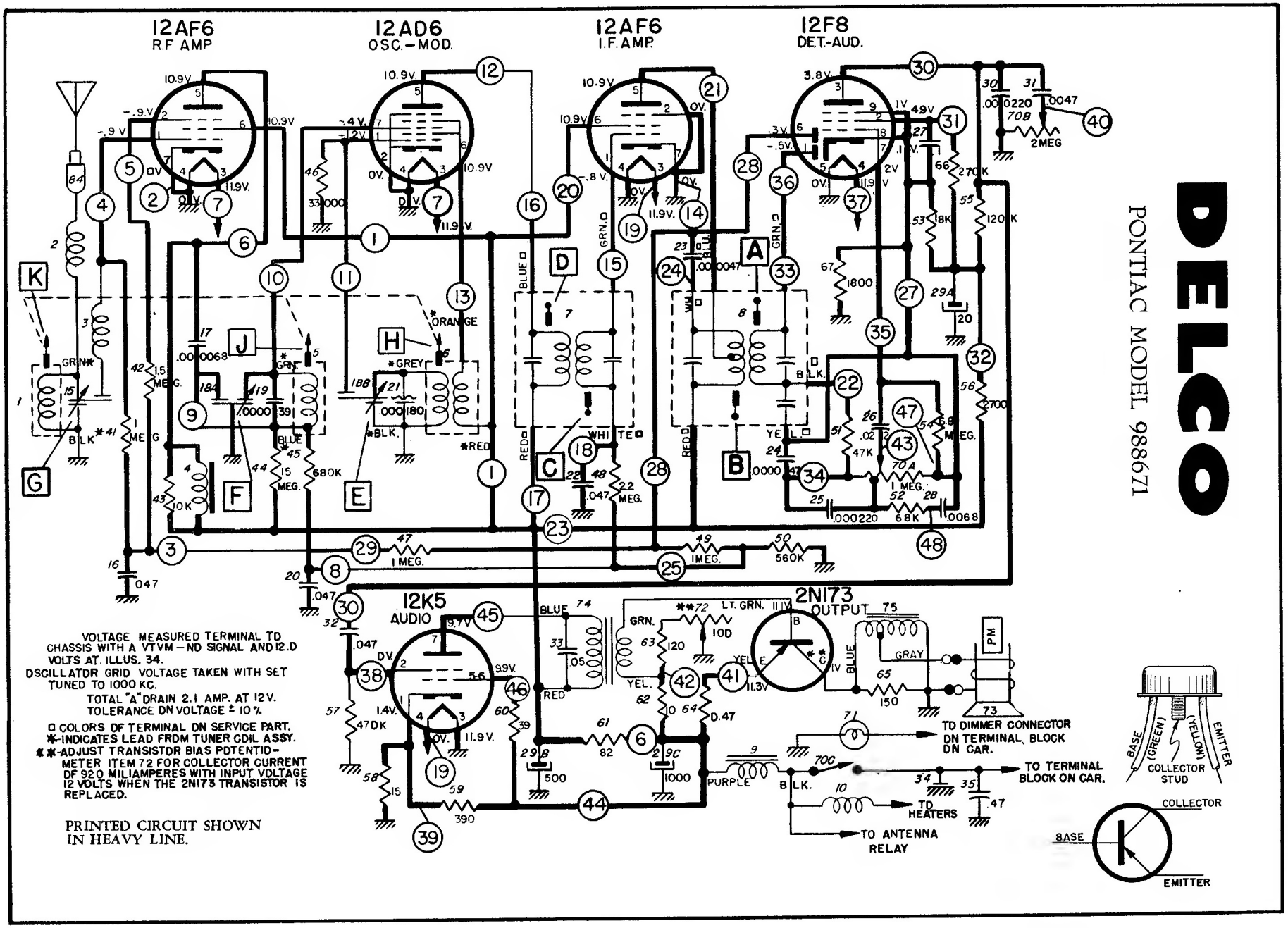
12AF6
R.F. AMP
12AD6
OSC.-MOD.
12AF6
I.F. AMP.
12F8
DET.-AUD.
12K5
AUDIO
2N173
OUTPUT
DELCO
PONTIAC MODEL 988671
VOLTAGE MEASURED TERMINAL TO CHASSIS WITH A VTVM-NO SIGNAL AND 12.0 VOLTS AT ILLUS. 34.
OSCILLATOR GRID VOLTAGE TAKEN WITH SET TUNED TO 1000 KC.
TOTAL "A" DRAIN 2.1 AMP. AT 12V.
TOLERANCE ON VOLTAGE ± 10%
□ COLORS OF TERMINAL ON SERVICE PART.
✱-INDICATES LEAD FROM TUNER COIL ASSY.
✱✱-ADJUST TRANSISTOR BIAS POTENTIOMETER ITEM 72 FOR COLLECTOR CURRENT OF 920 MILIAMPERES WITH INPUT VOLTAGE 12 VOLTS WHEN THE 2N173 TRANSISTOR IS REPLACED.
PRINTED CIRCUIT SHOWN IN HEAVY LINE.
TO DIMMER CONNECTOR ON TERMINAL BLOCK ON CAR.
TO TERMINAL BLOCK ON CAR.
TO HEATERS
TO ANTENNA RELAY
BASE
(GREEN)
(YELLOW)
EMITTER
COLLECTOR STUD
COLLECTOR
BASE
EMITTER

DELCO

PONTIAC MODEL 988671

TROUBLE SHOOTING THE OUTPUT STAGE

A quick way to determine that the 2N173 is conducting can be made by checking the collector voltage, from transistor case to the radio case. If no voltage is present the transistor is not conducting or the transistor heat radiator is grounded to the radio case. If the voltage at the collector is higher than listed the transistor is conducting too heavily (check with milliammeter) or the output transformer is open. The amount of current the transistor conducts is determined by the voltages at each element, the resistor in the base and emitter circuits, the input transformer secondary resistance, and the transistor itself.

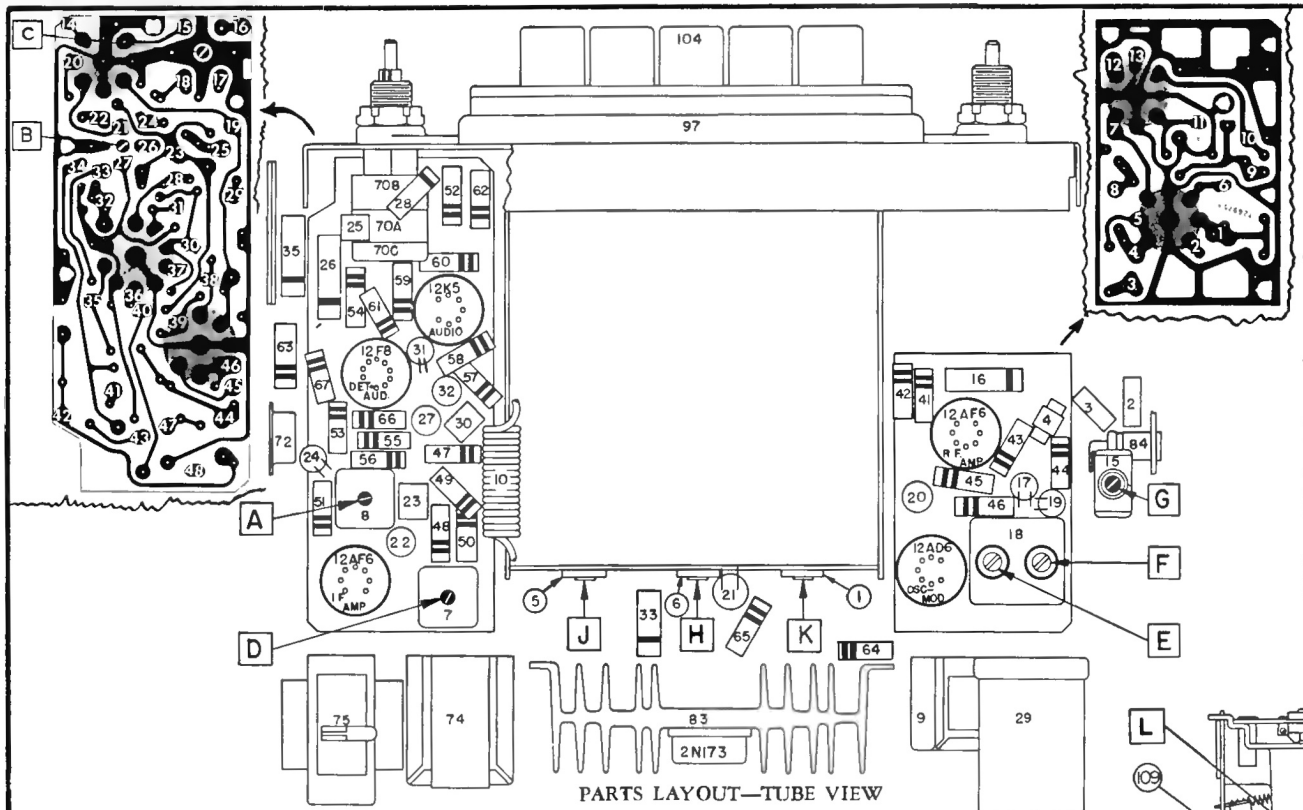

PARTS LAYOUT—TUBE VIEW

ALIGNMENT PROCEDURE:

Steps	Series Capacitor or Dummy Antenna	Connect to	Signal Generator Frequency	Tune Receiver to	Adjust in Sequence For Max. Output
1	0.1 Mfd.	12BE6 Grid (Pin #7)	262 KC	High Frequency Stop	A, B, C, D
2	0.000047 Mfd.	Antenna Connector	1615 KC	High Frequency Stop	*E, F, G
3	0.000047 Mfd.	Antenna Connector	600 KC	Signal Generator Signal	J, K
4	0.000047 Mfd.	Antenna Connector	1615 KC	High Frequency Stop	F, G
5	0.000047 Mfd.	Antenna Connector	1000 KC	Signal Generator Signal	**L

*Before making this adjustment check the mechanical setting of the oscillator core "H." The slotted end of core should be 1⅝" from the mounting end of the coil form. (This measurement is readily made by inserting a suitable plug in the mounting end of the coil form.) Core adjustment should be made with a non-metallic screwdriver.

**"L" is the pointer adjustment screw which is on the pointer connecting link (see turner drawing) and should be adjusted so the pointer reads 1000 KC.

With the radio installed and the car antenna plugged in adjust the antenna trimmer "G" for maximum volume with the radio tuned to a weak station between 600 and 1000 KC. (See sticker on case.)

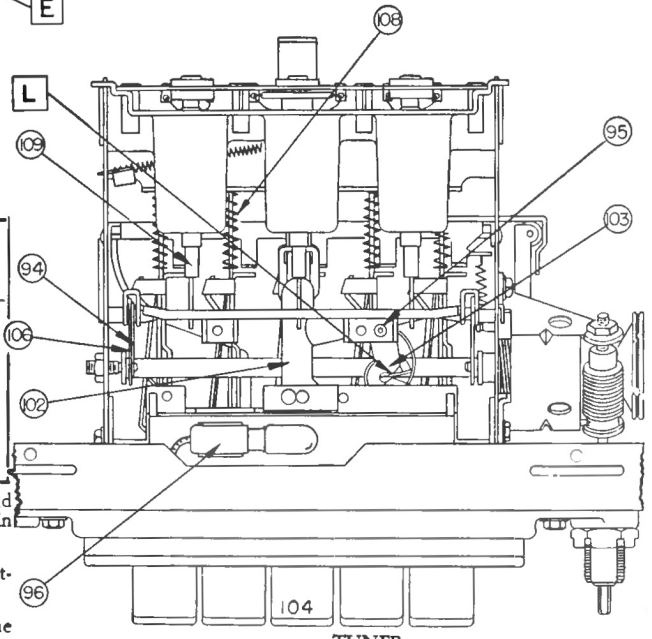

TUNER