EMERSON Chassis 120818, 120819, Models 31L12, 31L13, 31L14, 31T12, and 31T13,

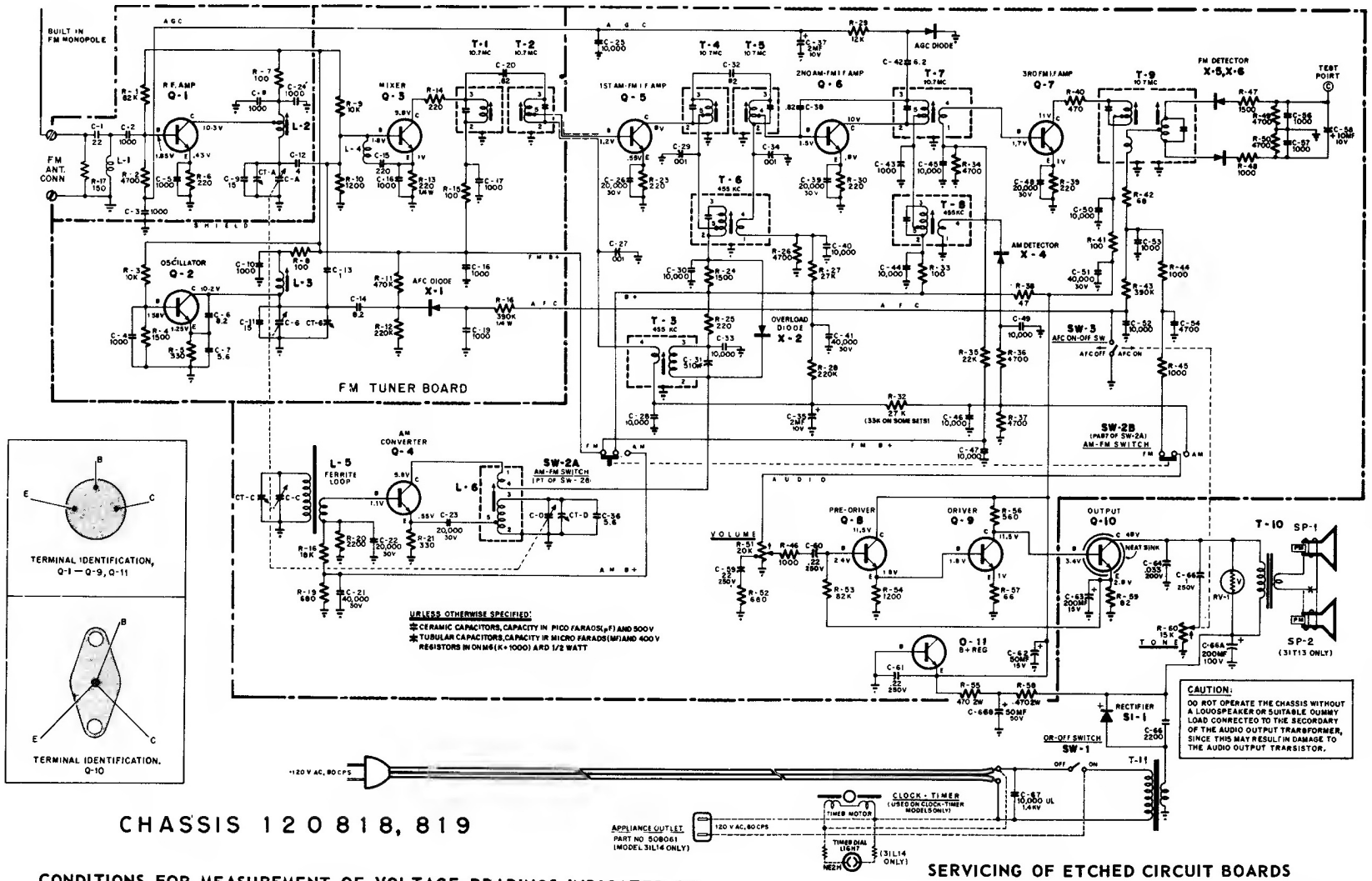

CHASSIS 120818, 819

CONDITIONS FOR MEASUREMENT OF VOLTAGE READINGS INDICATED ON SCHEMATIC DIAGRAM

1) Voltage measurements are positive DC, taken between points indicated and common terminal of electrolytic capacitor C-66.
2) Volume control set for minimum volume and tuning capacitor fully open with no signal applied.
3) Measurements taken with SW-2 in following positions: Q-1, 2, 3, 7 (FM) Q-4 (AM) Q-5, 6, 8, 9, 10, 11 (AM or FM)

SERVICING OF ETCHED CIRCUIT BOARDS

When servicing etched circuit boards, it is recommended that a low-wattage soldering iron (approximately 20 to 30 watts) be utilized. Under no circumstances should an excessive amount of heat be applied to the etched foil, since this will result in the etched wiring becoming unbonded from the circuit board. Broken foil leads, if encountered, may be repaired by soldering a piece of stiff hook-up wire across the break. When soldering, a small stiff-bristled brush should be used to wipe away melted solder before it has a chance to accummulate or drip into adjacent wiring or components.

Emerson Radio

MODELS: 31T12, 31T13, 31L12, 31L13, 31L14
CHASSIS: 120818, 120819

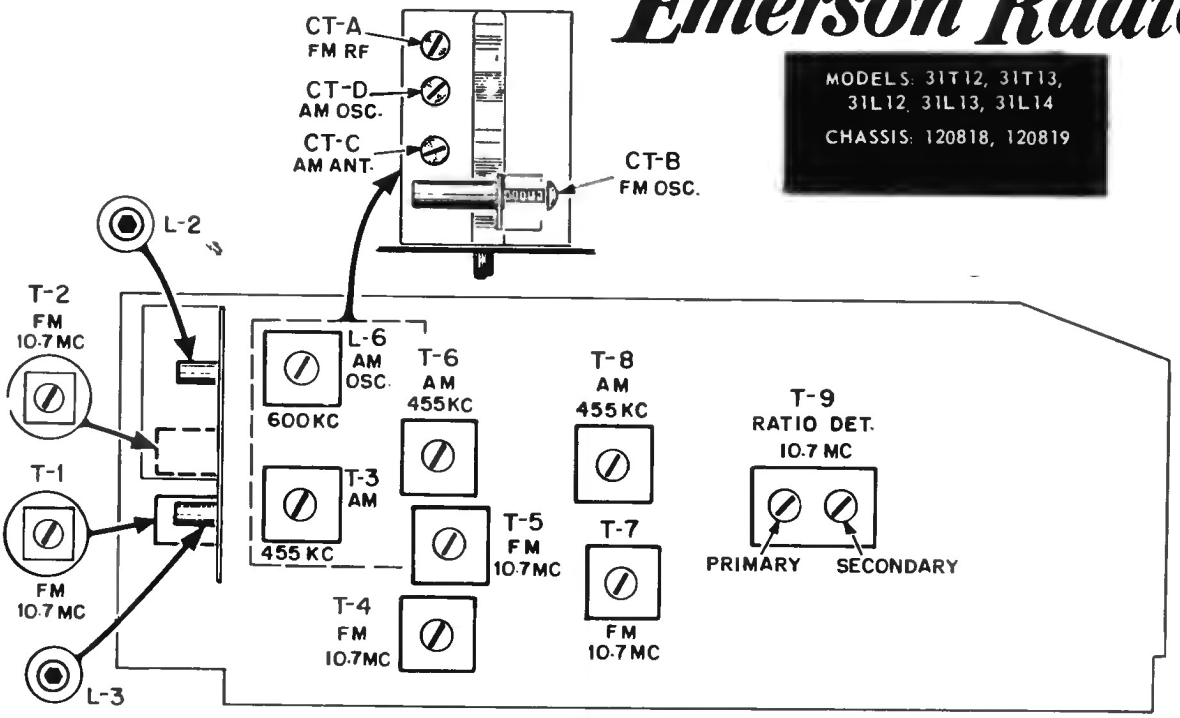

ALIGNMENT POINTS

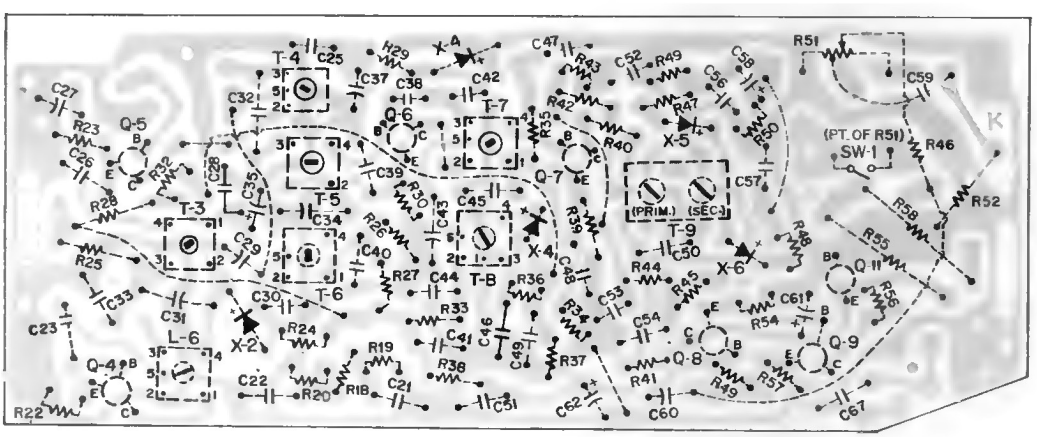

ETCHED CIRCUIT BOARD – MAIN CHASSIS SECTION (BOTTOM VIEW)

DIAL-CORD STRINGING VIEWED FRDM FRDNT

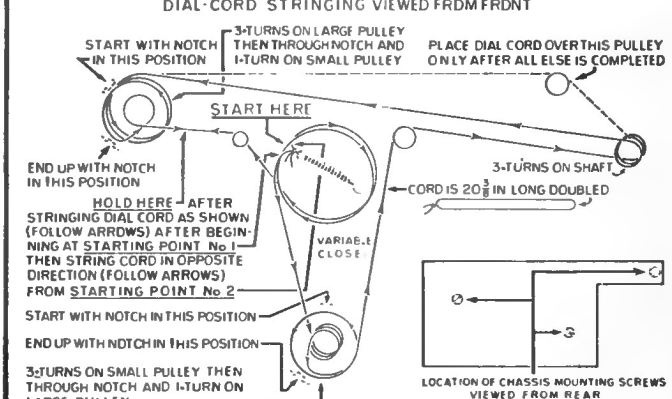

NOTE, WHEN REMOVING OR REPLACING CHASSIS, IT IS RECOMMENDED THAT LEAD DRESSING AND CAPTIVATION BE MAINTAINED.

DIAL STRINGING

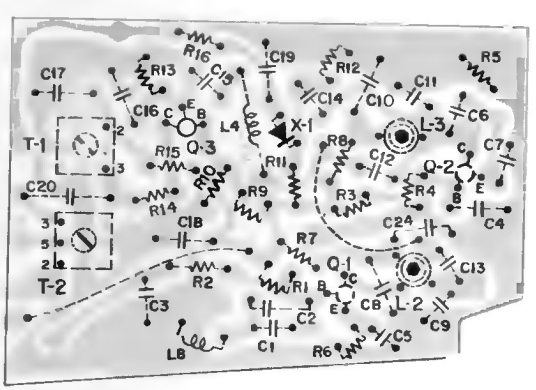

ETCHED CIRCUIT BOARD – TUNING SECTION (BOTTOM VIEW)