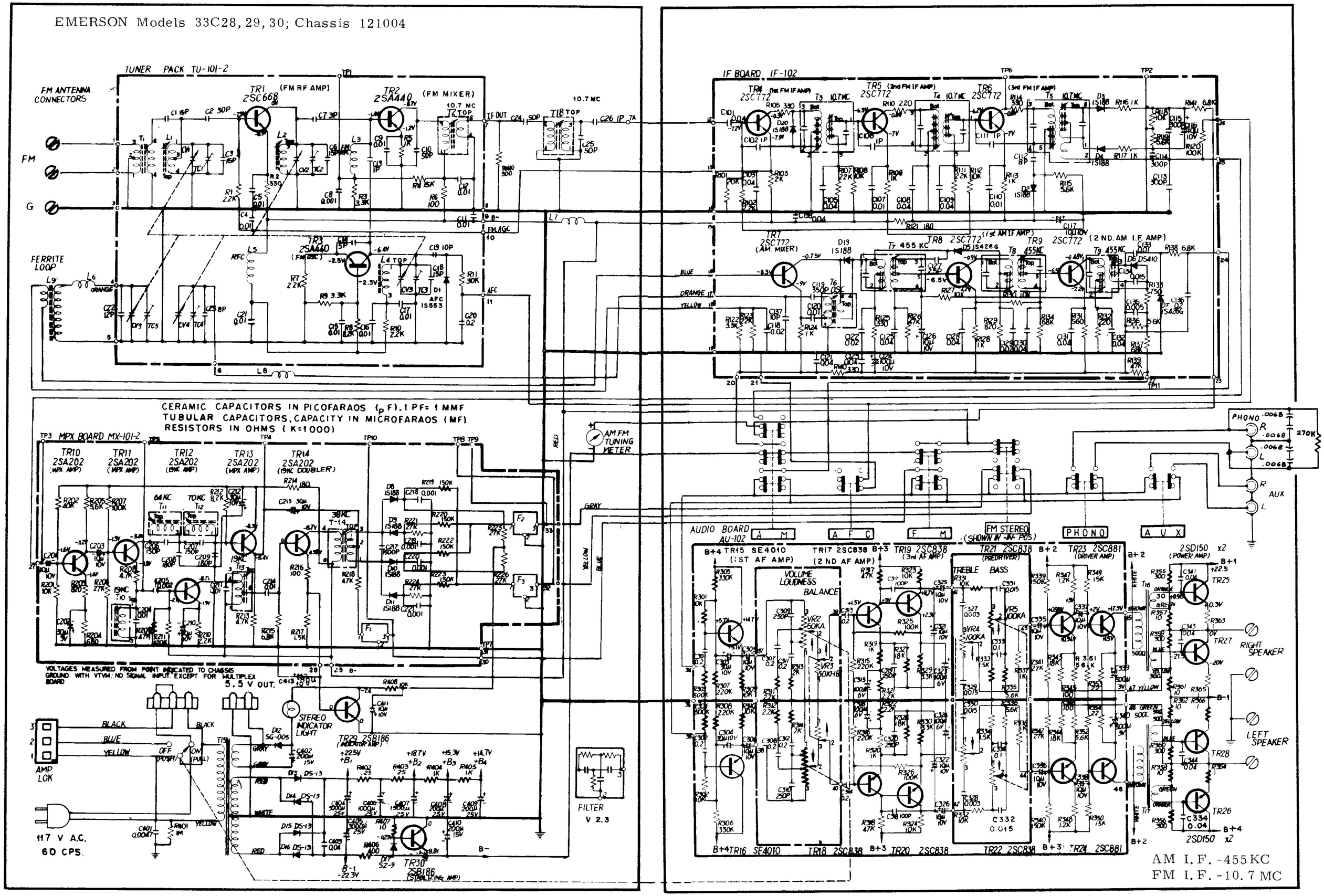EMERSON Models 33C28, 29, 30; Chassis 121004