EMERSON RADIO

MODEL: 586

CHASSIS MODELS: 120023B, 120083B

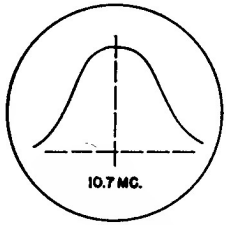

I.F. AND LIMITER

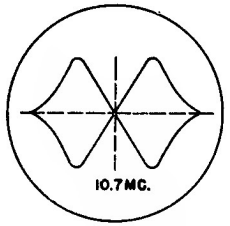

DISCRIMINATOR

ALIGNMENT CURVES (FM)

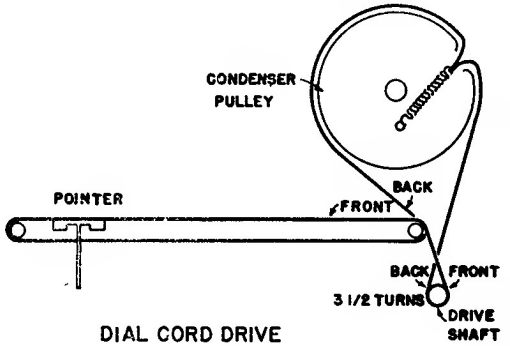

DIAL CORD DRIVE

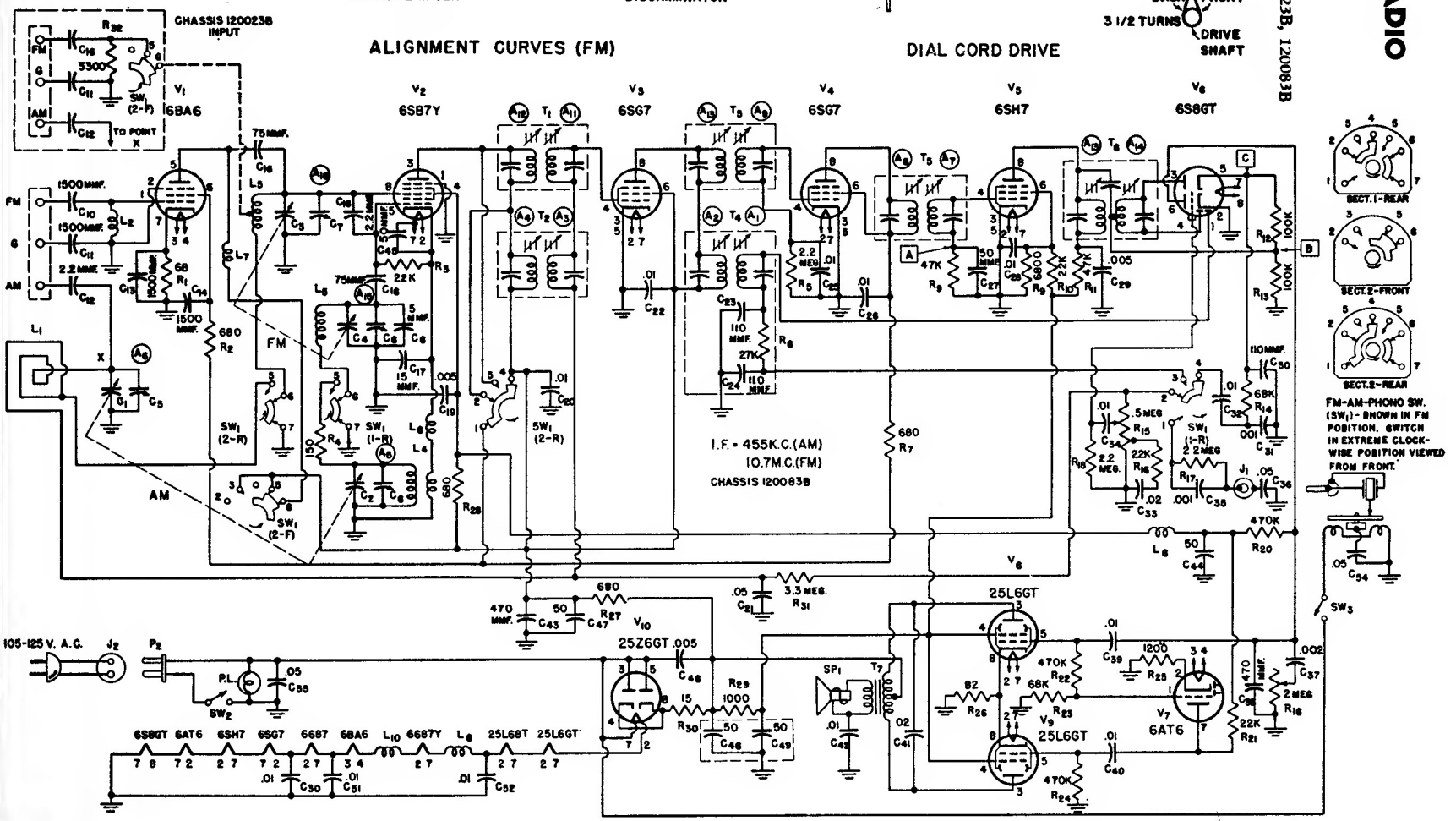

Emerson Radio Model 586, Chassis 120023B, 120083B

ALIGNMENT INSTRUCTIONS

1. To position pointer, turn variable condenser fully closed and set pointer to reference mark on dial backplate at the low frequency end of the dial.
2. Volume control should be set at maximum position. The output of the signal generator should be no higher than necessary Attenuate the signal input as alignment proceeds. Use an insulated alignment tool for all adjustments.
3. Use isolation transformer if available; otherwise connect a .1 mfd. condenser in series with low side of signal generator to chassis.

AM Alignment

	DUMMY ANTENNA	SIGNAL GENERATOR COUPLING	SIGNAL GENERATOR FREQUENCY	BAND SWITCH POSITION	RADIO DIAL SETTING	OUTPUT METER	ADJUST	REMARKS
1	.1 mfd.	High side to Pin 8 (grid) of 6SB7Y. Low side to chassis.	455 KC.	Broadcast	Tuning condenser fully open.	Across voice coil.	A1, A2, (Trans. T4). A3, A4, (Trans. T2).	Adjust for maximum output. Reduce dummy antenna to .001 mfd. if isolation trans. is not used.
2		Loop	1600 KC.	Broadcast	Tuning condenser fully open.	Across voice coil.	A5, (Trimmer cond. C6).	Form loop of several turns of wire. Radiate signal into receiver loop. Adjust for maximum output.
3		Loop	1400 KC.	Broadcast	Tune for max. output.	Across voice coil.	A6, (Trimmer cond. C5).	Adjust for maximum output.

FM I-F and Disc. Alignment Using AM Signal Generator and VTVM

	DUMMY ANTENNA	SIGNAL GENERATOR COUPLING	SIGNAL GENERATOR FREQUENCY	BAND SWITCH POSITION	RADIO DIAL SETTING	CONNECT VTVM	ADJUST	REMARKS
1	.01 mfd.	High side to Pin 4 (grid) of 6SG7 2nd i.f (V4). Low side to chassis.	10.7 mc. (Unmodulated)	Frequency modulation	Tuning condenser fully open.	Connect d.c. probe to point "A". Common to chassis.	A7, A8, (Trans. T5).	Adjust for maximum output.
2	.01 mfd.	High side to Pin 4 (grid) of 6SG7 1st i-f (V3). Low side to chassis.	10.7 mc. (Unmodulated)	Frequency modulation	Tuning condenser fully open.	Connect d.c. probe to point "A". Common to chassis.	A9, A10, (Trans. T3).	Adjust for maximum output.
3	.01 mfd.	High side to Pin 5 (osc. grid) of 6SB7Y conv. (V2). Low side to chassis.	10.7 mc. (Unmodulated)	Frequency modulation	Tuning condenser fully open.	Connect d.c. probe to point "A". Common to chassis.	A11, A12, (Trans. T1).	Adjust for maximum output.
4	.01 mfd.	High side to Pin 4 (grid) of 6SG7 2nd i-f (V4). Low side to chassis.	10.7 mc. (Unmodulated)	Frequency modulation	Tuning condenser fully open.	Connect d.c. probe to point "B". Common to chassis.	A13, (Trans. T6).	Adjust for maximum output.
5	.01 mfd.	"	10.7 mc. (Unmodulated)	Frequency modulation	Tuning condenser fully open.	Connect d.c. probe to point "C". Common to chassis.	A14, (Trans. T6).	Adjust for zero output. Continue with FM r-f alignment.

FM I-F and Disc. Alignment Using Sweep Signal Generator and Oscilloscope.

Use frequency modulated signal, with 60 cycle modulation and 450 kc. sweep. Use 120 cycle sawtooth sweep voltage in oscilloscope for horizontal deflection.

	DUMMY ANTENNA	SIGNAL GENERATOR COUPLING	SIGNAL GENERATOR FREQUENCY	BAND SWITCH POSITION	RADIO DIAL SETTING	CONNECT OSCILLOSCOPE	ADJUST	REMARKS
1	.01 mfd.	High side to Pin 4 (grid) of 6SG7 1st i-f (V3). Low side to chassis.	10.7 mc. (Unmodulated).	Frequency modulation	Tuning condenser fully open.	Vertical input to Point "A". Ground to chassis.	A7, A8, (Trans. T5). A9, A10, (Trans. T3).	Adjust for maximum output (height) and symmetry as per i-f alignment curve shown.
2	.01 mfd.	High side to Pin 5 (osc. grid) of 6SB7Y conv. (V2). Low side to chassis.	10.7 mc. (Unmodulated).	Frequency modulation	Tuning condenser fully open.	Vertical input to Point "A". Ground to chassis.	A11, A12, (Trans. T1).	Adjust for maximum output (height) and symmetry as per i-f alignment curve shown.
3	.01 mfd.	High side to Pin 4 (grid) of 6SG7 2nd i-f (V4). Low side to chassis.	10.7 mc. (Unmodulated).	Frequency modulation	Tuning condenser fully open.	Vertical input to Point "C". Ground to chassis.	A13, A14, (Trans. T6).	Alternately adjust A13 for maximum amplitude and A14 for maximum straightness of cross-over lines, with cross-over occurring at center of pattern as per discriminator alignment curve Continue with FM r-f alignment.

FM R-F Alignment

	DUMMY ANTENNA	SIGNAL GENERATOR COUPLING	SIGNAL GENERATOR FREQUENCY	BAND SWITCH POSITION	RADIO DIAL SETTING	CONNECT VTVM	ADJUST	REMARKS
1	150 ohm resistor in series with each gen. lead.	High side to FM ant. term. Low side to chassis.	108.0 mc. (Unmodulated).	Frequency modulation	Tuning condenser fully open (108.0 mc.)	Connect d.c. probe to point "A". Common to chassis.	A15, (Trimmer cond. C8).	Adjust for maximum output.
2	"	"	106.0 mc.	Frequency modulation	Tune for maximum output.	"	A16, (Trimmer cond. C7).	Adjust for maximum output.