EMERSON RADIO

MODEL: 613

CHASSIS MODELS 120085A

Battery Complement: Replace "A" battery with standard "D" flashlight cell. Replace "B" battery with 67½ volt Eveready No. 467 or equivalent.

The color coding of the battery cable is as follows:

Red—B+ Yellow—A+
White—B— Black—A—

VOLTAGE READINGS

SYMBOL	TUBE TYPE	PIN 1	PIN 2	PIN 3	PIN 4	PIN 5	PIN 6	PIN 7
V1	1R5	1.5	88	60	-3.2	1.5	0	2.8
V2	1U4	2.8	88	88	0	2.8	2.0	4.0
V3	1U5	0	43	18	.4	0	0	1.5
V4	3V4 or 3Q4	4.0	84	0	88	5.3	5.3	6.7

Socket connections are shown as bottom views. Measurements are taken from socket pin to chassis

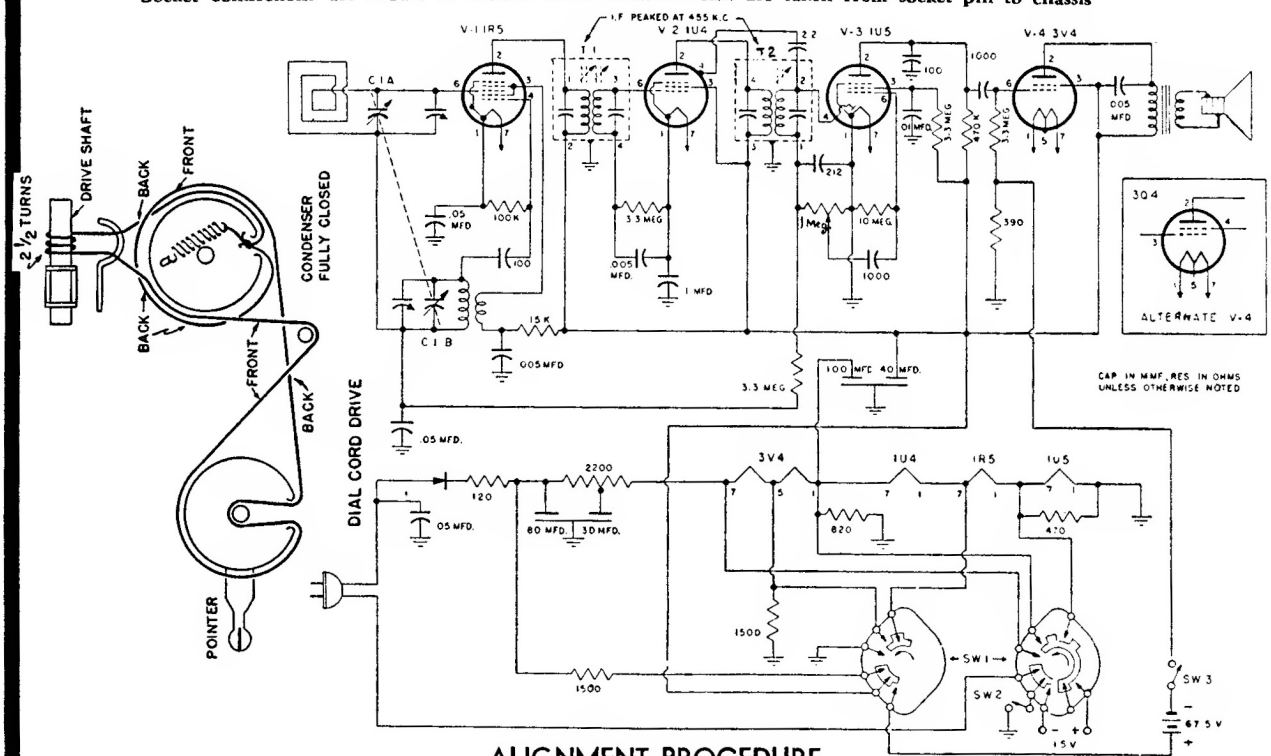

ALIGNMENT PROCEDURE

1. Use battery power when available. When a.c. power is used, connect the line cord through an isolation transformer if available. Otherwise connect a 0.1 mfd. condenser in series with the low side of the signal generator and B—.
2. Set the volume control at maximum. The output of the signal generator should be no higher than that necessary to obtain an output reading. Attenuate the signal input as alignment proceeds. Use an insulated alignment tool.
3. Maintain the loop in the same position relative to the chassis as when the receiver is in the cabinet.
4. Oscillator and antenna trimmers are reached from bottom of chassis.

	DUMMY ANTENNA	SIGNAL GENERATOR COUPLING	SIGNAL GENERATOR FREQUENCY	RADIO DIAL SETTING	OUTPUT METER	ADJUST	REMARKS
1	0.1 mfd.	High side to grid (pin 6) of V1 (1R5). Low side to chassis.	455 KC.	Variable condenser fully open.	Across voice coil.	Primary and secondary of T2 and T1.	Adjust for maximum output. If a.c. is used, without an isolation transformer, reduce dummy antenna to 200 mmf.
2	200 mmf.	High side to external antenna lead. Low side to chassis.	1620 KC.	Variable condenser fully open.	Across voice coil.	Oscillator trimmer on C1B.	Adjust for maximum output.
	200 mmf.	"	1400 KC.	Tune for maximum output.	Across voice coil.	Antenna trimmer on C1A.	Adjust for maximum output.