EMERSON RADIO

MODEL – 778B

CHASSIS – 120199-B

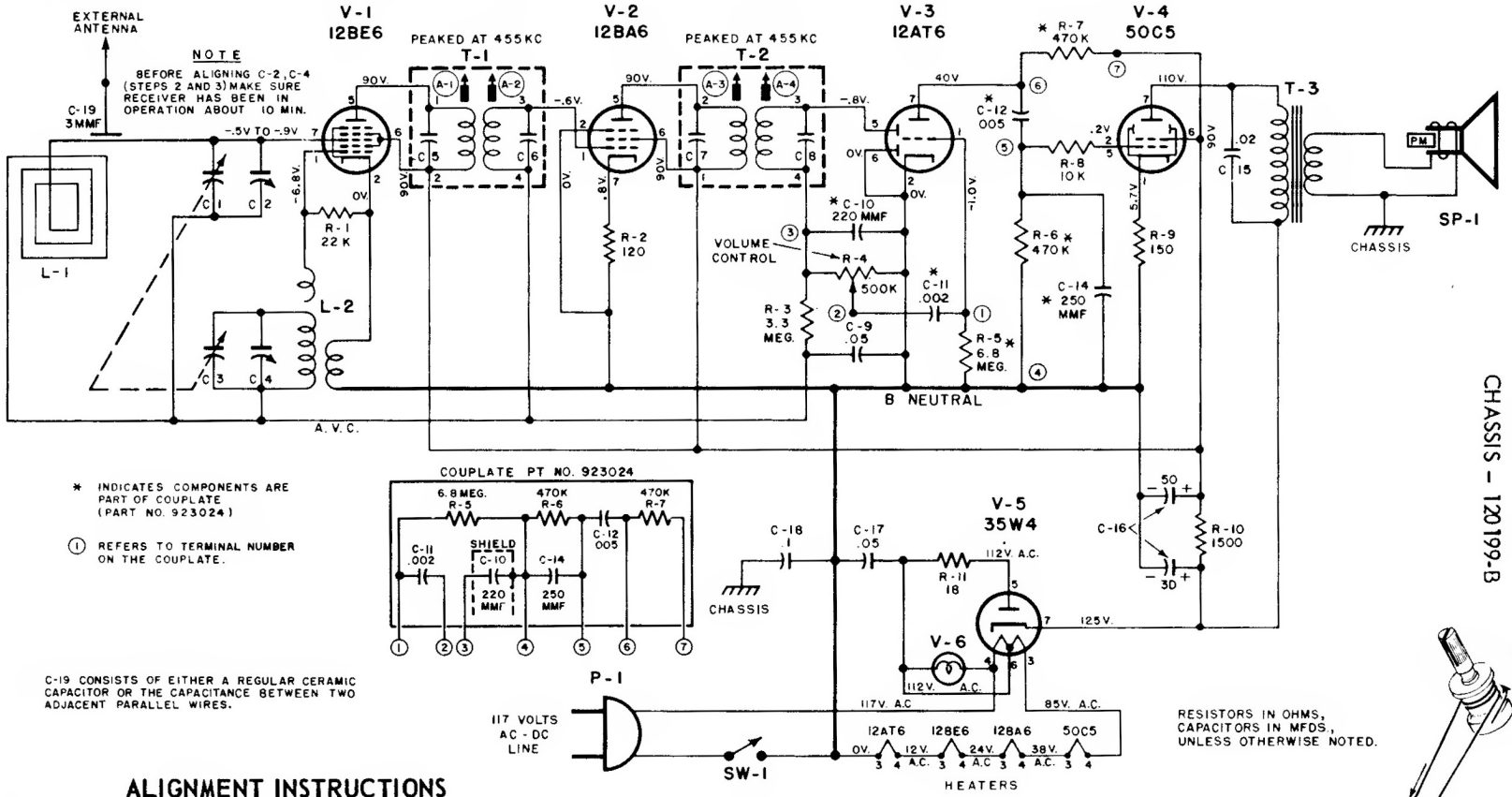

ALIGNMENT INSTRUCTIONS

STEP	DUMMY ANTENNA	SIGNAL GENERATOR COUPLING	SIGNAL GENERATOR FREQUENCY	RADIO DIAL SETTING	OUTPUT METER	ADJUST	REMARKS
1	.005 mfd.	High side to grid (pin 7) of V1 (12BE6). Low side to	455 KC	Variable condenser fully open.	Across voice coil.	T2, T1 (A3, A4, A1, A2)	Adjust for maximum output.
2		Form loop of several turns and radiate signal into receiver	1620 KC	"	Across voice coil.	Trimmer C-4 (Osc.)	Adjust for maximum output.
3		"	1400 KC	Tune for maximum output.	Across voice coil.	Trimmer C-2 (Ant.)	Adjust for maximum output.