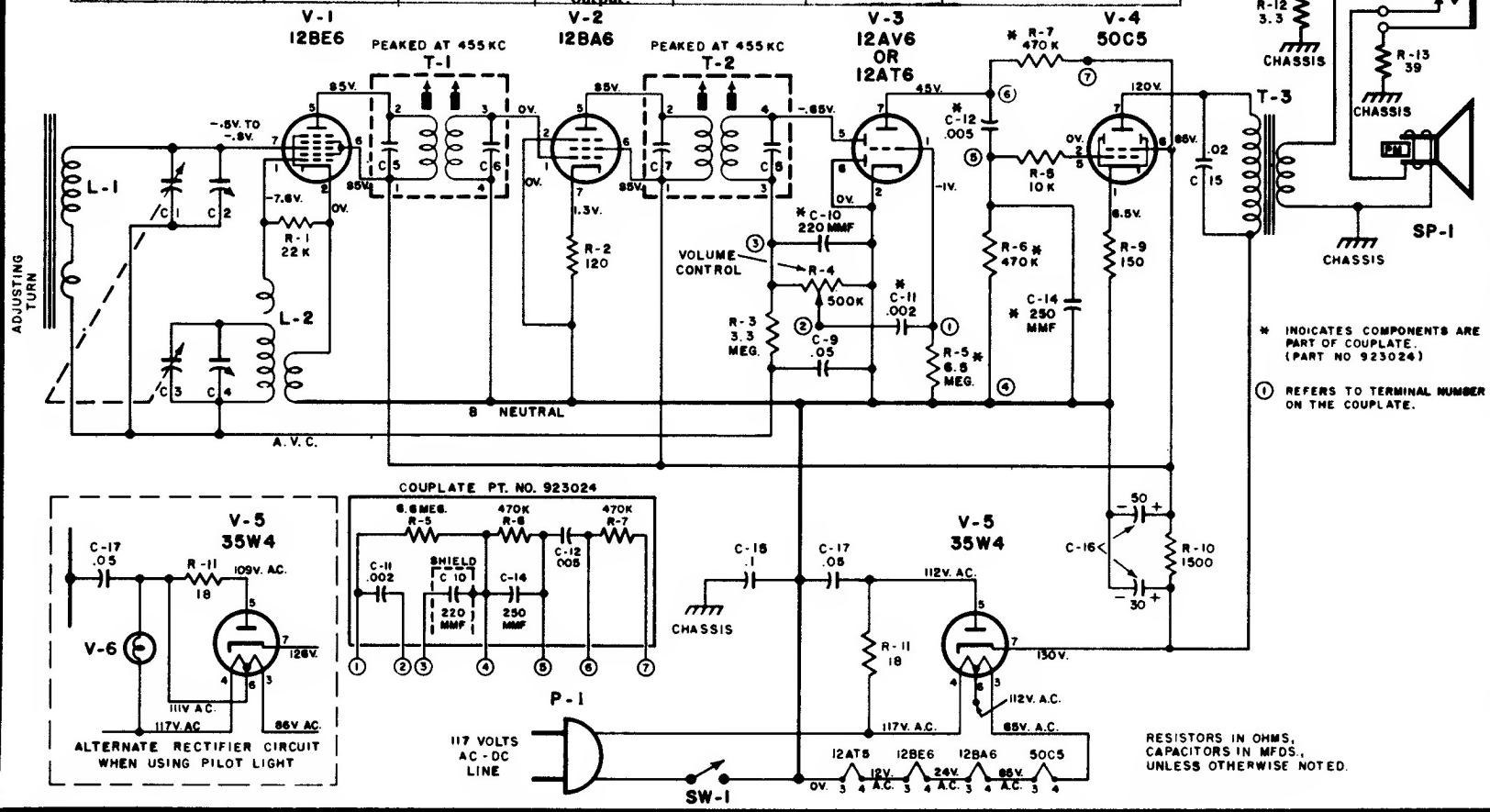STEP	DUMMY ANTENNA	SIGNAL GENERATOR COUPLING	SIGNAL GENERATOR FREQUENCY	RADIO DIAL SETTING	OUTPUT METER	ADJUST	REMARKS
1	.005 mfd.	High side to grid (pin 7) of V1 (12BE6). Low side to B-neutral	455 KC	Variable condenser fully open.	Across voice coil.	T2, T1 (A3, A4, A1, A2)	Adjust for maximum output.
2		Form loop of several turns and radiate signal into receiver	1620 KC	"	Across voice coil.	Trimmer C-4 (Osc.)	Adjust for maximum output.
3		"	1400 KC	Tune for maximum output.	Across voice coil.	Trimmer C-2 (Ant.)	Adjust for maximum output.