Emerson Radio

MODEL 835A
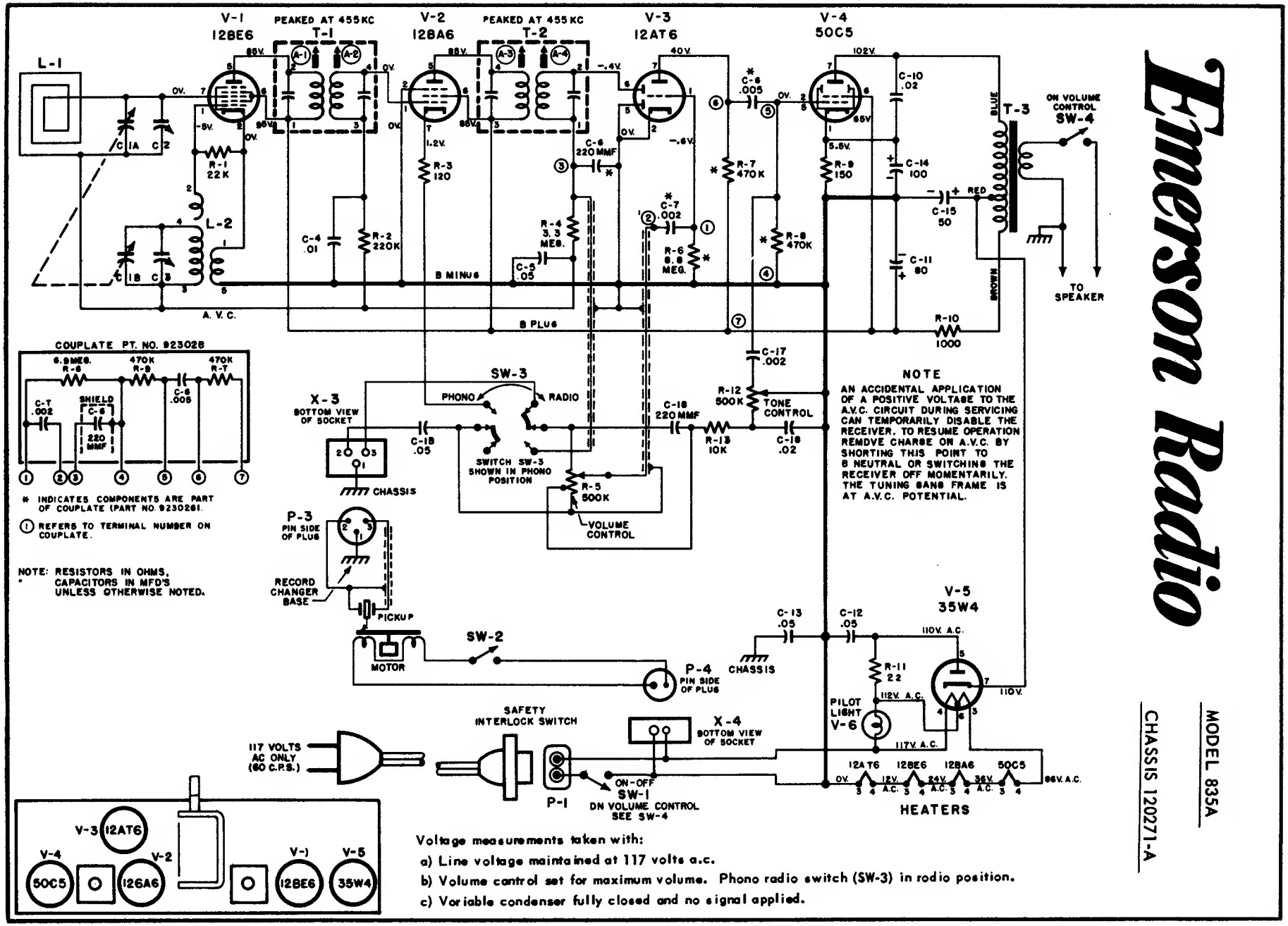
CHASSIS 120271-A