EMERSON RADIO & PHONOGRAPH CORPORATION

MODEL 851B
CHASSIS 120327B
MODEL 852B
CHASSIS 120334B
MODEL 853B
CHASSIS 120335B

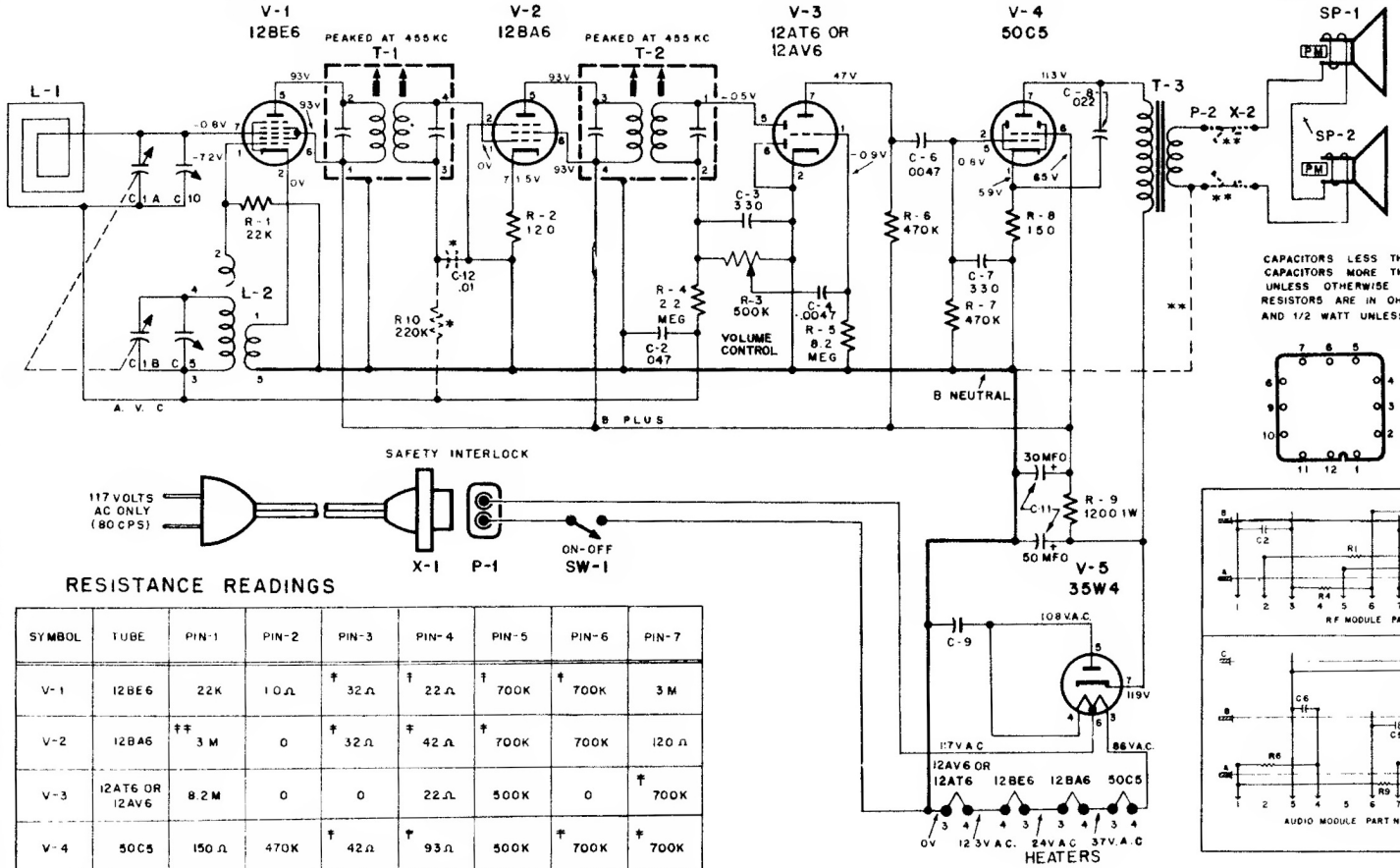

RESISTANCE READINGS

SYMBOL	TUBE	PIN-1	PIN-2	PIN-3	PIN-4	PIN-5	PIN-6	PIN-7
V-1	12BE6	22K	1.0Ω	† 32Ω	† 22Ω	† 700K	† 700K	3 M
V-2	12BA6	†† 3 M	0	† 32Ω	† 42Ω	† 700K	700K	120 Ω
V-3	12AT6 OR 12AV6	8.2 M	0	0	22Ω	500K	0	† 700K
V-4	50C5	150Ω	470K	† 42Ω	† 93Ω	500K	† 700K	† 700K
V-5	35W4	N.C.	N.C.	85Ω	120Ω	135Ω	115Ω	† 700K

† WAIT FOR METER TO SETTLE
†† 15 OHMS CHASSIS 120327-B

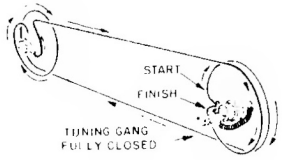

DIAL CORD STRINGING

CONDITIONS FOR VOLTAGE AND RESISTANCE READINGS

1. Voltages indicated are positive d.c., resistances in ohms, unless otherwise indicated.
2. Measurements made with voltohmyst or equivalent.
3. All measurements taken from pin to B neutral unless otherwise indicated.
4. Voltage measurements taken with:
   a) Line voltage maintained at 117 volts a.c.
   b) Volume control set for maximum volume. Phono radio switch (SW-3) in radio position.
   c) Variable condenser fully closed and no signal applied.
5. Resistance measurements taken with:
   a) Power line cord disconnected from outlet.
   b) Volume control set far maximum volume.
6. Nominal tolerance on component values makes possible a variations of ±15% in voltage and resistance readings.
7. N.C. denotes no connection, K is kilohms, Meg. is megohms. Resistances marked * are measured to Pin 7 of Rectifier 35W4(B+).

EMERSON RADIO

Model 851B, Chassis 120327B
Model 852B, Chassis 120334B
Model 853B, Chassis 120335B

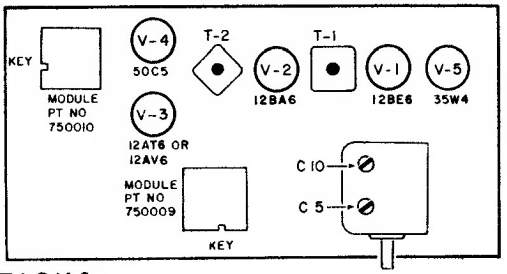

ALIGNMENT INSTRUCTIONS

1. Use isolation transformer if available. If not, connect a .25 mfd. condenser in series with low side of signal generator and B neutral. (Low side of volume control.)
2. Volume control should be at maximum position. Output of signal generator should be no higher than necessary to obtain an output reading. Use an insulated screwdriver for adjusting.

STEP	DUMMY ANTENNA	SIGNAL GENERATOR COUPLING	SIGNAL GENERATOR FREQUENCY	RADIO DIAL SETTING	OUTPUT METER	ADJUST	REMARKS
1	.005 mfd.	High side to grid (pin 7) of V1 (12BE6). Low side to B-neutral. (See Alignment Note)	455 KC	Variable condenser fully open.	Across voice coil.	T2, T1	Adjust for maximum output.
2		Form loop of several turns and radiate signal into receiver.	1620 KC	"	Across voice coil.	Trimmer C-1B (Osc.)	Adjust for maximum output.
3		"	1400 KC	Tune for maximum output.	Across voice coil.	Trimmer C-1A (Ant.)	Adjust for maximum output.

SERVICING MODULIZED RADIO CHASSIS

1. General Information

The same care should be exercised in repairing a modulized etched wiring radio chassis as is used in regular etched circuit board repair (low wattage iron, stiff brush, etc.). Past experience has indicated that the majority of radio failures are due to tubes and components which are not included within a module (electrolytic, oscillator coil, volume control, etc.), therefore, the type of service required on modulized chassis will generally be the same as for conventional chassis.

Since most of the R & C components in the R.F. and I.F. sections are in one module and the audio R & C components in the other, it would only be necessary to isolate the trouble to one of the modules rather than to a specific component. This should reduce troubleshooting time on the more difficult repair jobs, especially those which are of an intermittent nature.

If a particular trouble could be isolated to a defective component as easily as to a defective module, or if a replacement module were not immediately available, it would be desirable to repair rather than replace the module. Information on the replacement and repair of a module is given below.

2. Replacement of a Module

a-Remove defective module by dipping underside (dip soldered side) in a small solder pot (which is now commercially available) or apply a solder iron or gun with a square shaped tip to all of the risers at the same time.

b-While the heat is being applied to all of the risers at the same time by one of the above methods, pull the defective module away from the etched circuit board. (Note the location of the module positioning notch with respect to the etched board).

c-Place a new module in the etched board making certain to position it as the original and individually solder each riser in place or dip in a solder pot.

Note: To reduce the possibility of interchanging modules during repair or orientating the module incorrectly, several unused riser wires are clipped below deck "A" as can be noted on the module schematic. The combination of clipped riser wires are different between the two modules. Since there are no holes in the etched circuit board to correspond to these clipped risers an exact replacement module can only be inserted the correct way.

3. Repair of Modules

The module diagrams shown on the schematic provide enough information to determine whether or not it would be practical to repair the module for a particular defect and if so how to proceed. These diagrams not only show the risers to which a component is connected, but also to which deck (A, B, C) it is physically mounted. This type of information is necessary to properly isolate a defective module component by cutting a riser wire and to show what other components are removed from the circuit at the same time. If it is practical to repair the module, then all modular components removed from the circuit (connected above the point where the riser is cut) must be replaced by conventional components soldered directly to the dip soldered side of the etched circuit board.

a-Determine defective component by general troubleshooting procedures.

b-Refer to proper module diagram on schematic and decide whether or not this component could be isolated (by cutting riser wire or wires) without disconnecting too many other components from the circuit.

c-If repair is practical, cut required riser wire or wires and connect replacement component or components to dip-soldered side of etched board (across proper riser wires) rather than to module itself.

Note: A diagonal cutters should never be used to cut a riser wire between decks since permanent damage could result. The pinching action of a diagonal cutter could crack one or more of the module decks. A very fine toothed saw blade or a small hand powered tool with a 1/32" abrasive disk should be used for this purpose.