Emerson

MODELS:
888 "TITAN"
888 "GALAXY"
CHASSIS: 120655

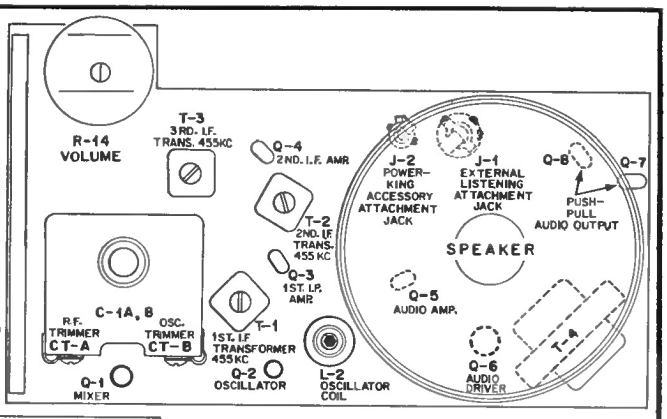

ALIGNMENT POINT LOCATION

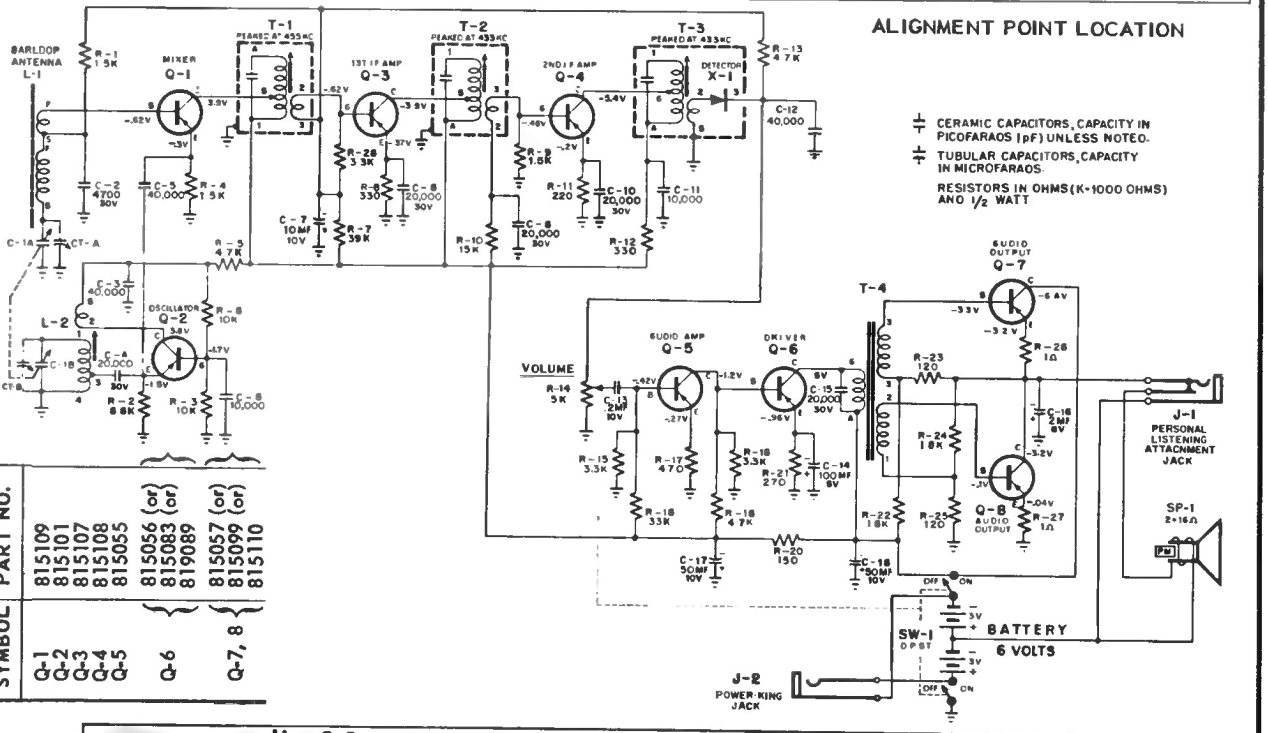

SYMBOL	PART NO.
Q-1	815109
Q-2	815101
Q-3	815107
Q-4	815108
Q-5	815055
Q-6	815056 (or) 815083 (or) 819089
Q-7, 8	815057 (or) 815099 (or) 815110

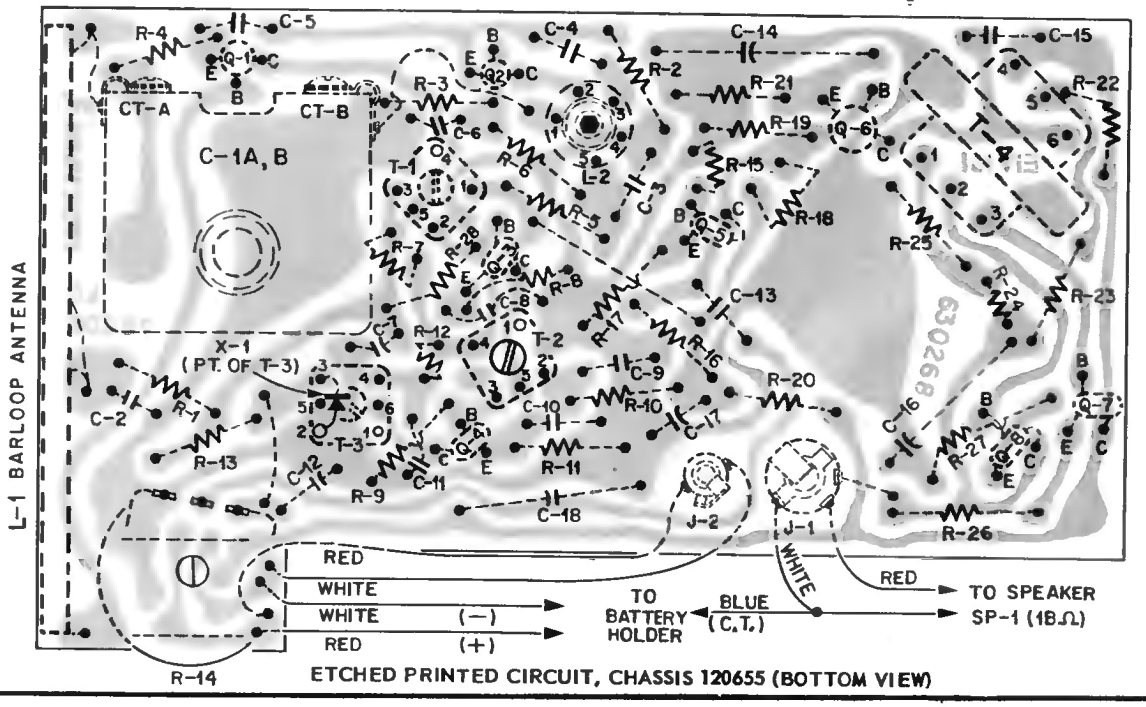

ETCHED PRINTED CIRCUIT, CHASSIS 120655 (BOTTOM VIEW)