Emerson Radio

MODEL 898B
CHASSIS 120456B
MODELS 970, 971, 971A

MODEL 903, chassis 120462B, is electrically similar to model 898B, chassis 120456B. Therefore, all control panel information is directly applicable, with the addition that the speaker selector switch is mounted on the control panel in model 903.

DISASSEMBLY INSTRUCTIONS

NOTE: To replace tubes, only masonite back within cabinet need be removed.

Record Changer:

Remove three Phillips head screws holding masonite back to cabinet and remove back.

Remove four Phillips head screws holding changer mounting board to cabinet.

Tilt mounting board up and back to a stable vertical position.

Remove five-prong plug and AC plug and line cord from amplifier chassis. (Unstaple fishpaper wire holders.)

Remove record changer.

To reassemble, reverse procedure.

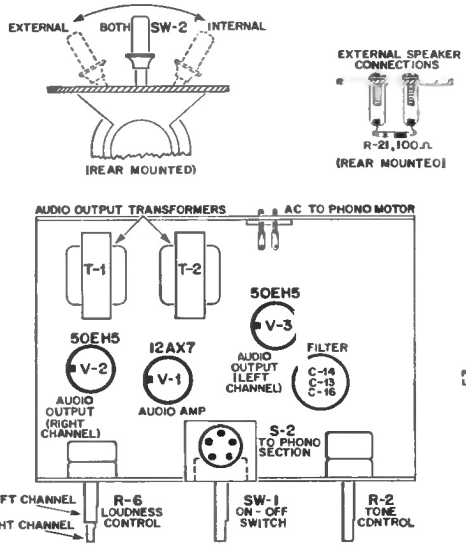

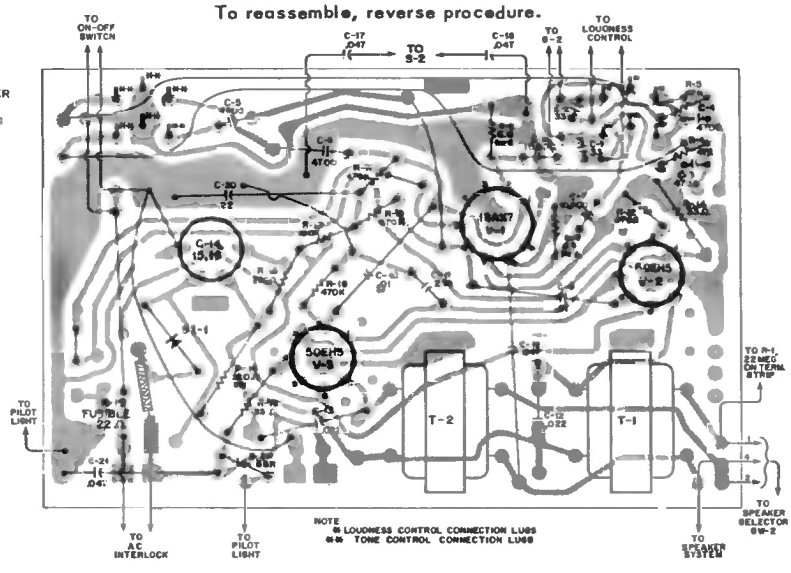

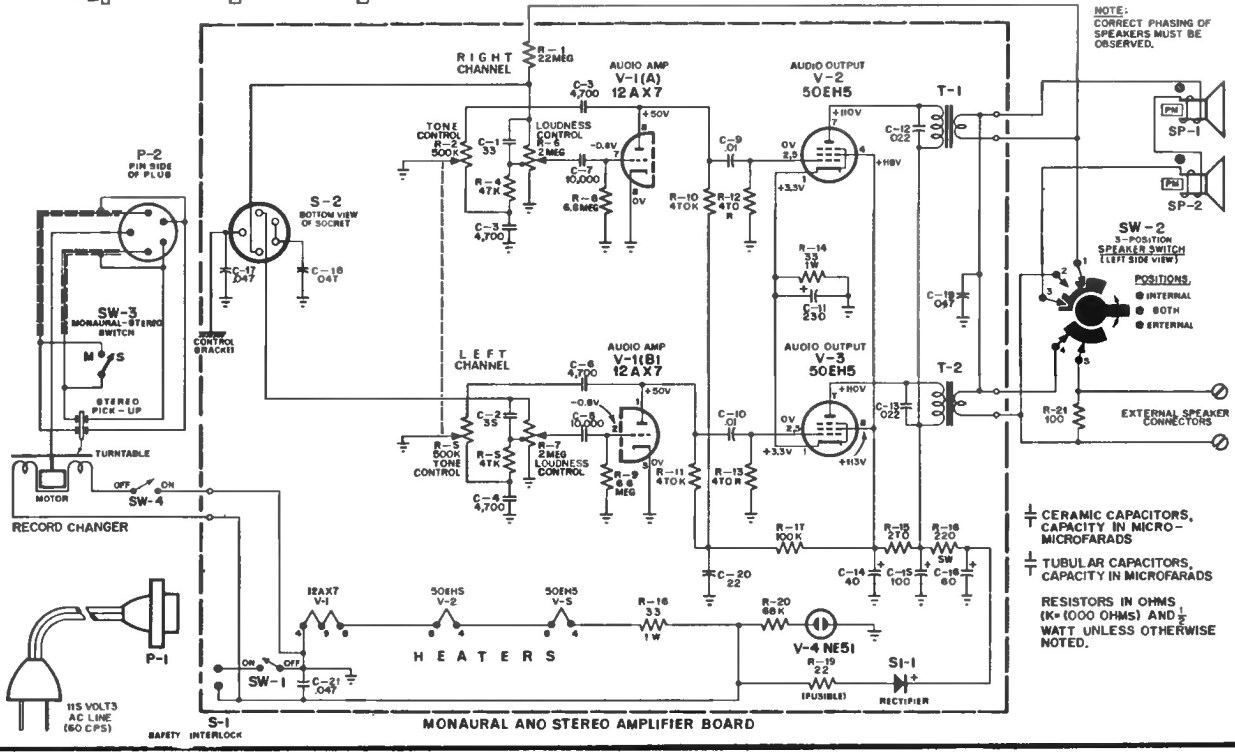

MONAURAL AND STEREO AMPLIFIER BOARD