I.F. ALIGNMENT PROCEDURE USING R.F. GENERATOR AND VTVM

Use of this method requires balancing of the ratio detector output before attempting alignment. To accomplish this, construct a voltage divider network by placing two 100 K resistors in series and wire them across C-17 (2 mfd. stabilizer capacitor). Be sure to remove this network after completion of the alignment procedure.

1. Voltages indicated are positive DC, resistances in ohms, unless otherwise indicated.
2. Measurements made with Voltohmyst or equivalent.
3. All measurements taken between pin and chassis ground.
4. All voltage measurements taken under the following conditions:
   a) Line voltage maintained at 117 volts.
   b) Tuning control turned fully counterclockwise (low end)

EMERSON RADIO

Models 920 and 925

Chassis 120494B

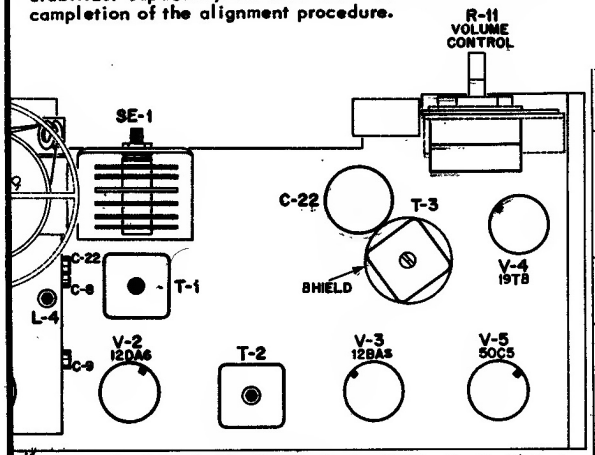

STEP	SIGNAL GENERATOR COUPLING	SIGNAL GENERATOR FREQUENCY	DIAL SETTING	VTVM	ADJUST	REMARKS
1.	High side to ant. input, low side to chassis through a .25 mfd. capacitor.	10.7 MC (unmod.)	Extreme CCW pos. (low end)	Across C-17 (near V-4). Use negative scale.	T-3 bottom, T-2 bottom, T-2 top, T-1 (1st IF), L-4 mixer coil.	Adjust in order given for max. neg. voltage. Maintain sig. gen. output for readings under 2 volts.
2.	" "	"	"	"	T-1 (1st IF)	Retune for max. neg. voltage.
3.	" "	"	"	One side of meter to center-tap of voltage divider network across C-17, other side to junction of R-8, C-14.	T-3 Top	Adjust for 0 volts output between pos. and neg. meter swing.

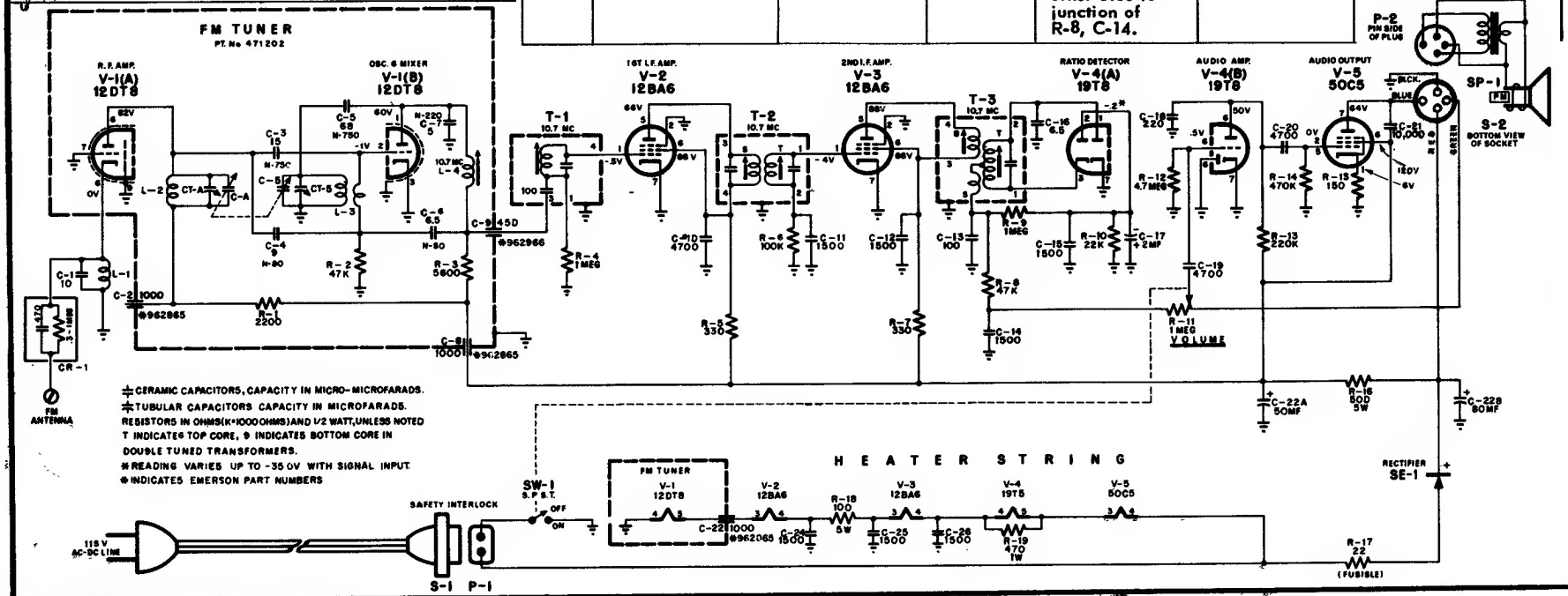

CERAMIC CAPACITORS, CAPACITY IN MICRO-MICROFARADS.
TUBULAR CAPACITORS CAPACITY IN MICROFARADS.
RESISTORS IN OHMS (K=1000 OHMS) AND 1/2 WATT, UNLESS NOTED
T INDICATES TOP CORE, ⊕ INDICATES BOTTOM CORE IN DOUBLE TUNED TRANSFORMERS.
* READING VARIES UP TO -35.0V WITH SIGNAL INPUT.
# INDICATES EMERSON PART NUMBERS