EMERSON RADIO Model 937B, Chassis 120558B

DISASSEMBLY INSTRUCTIONS
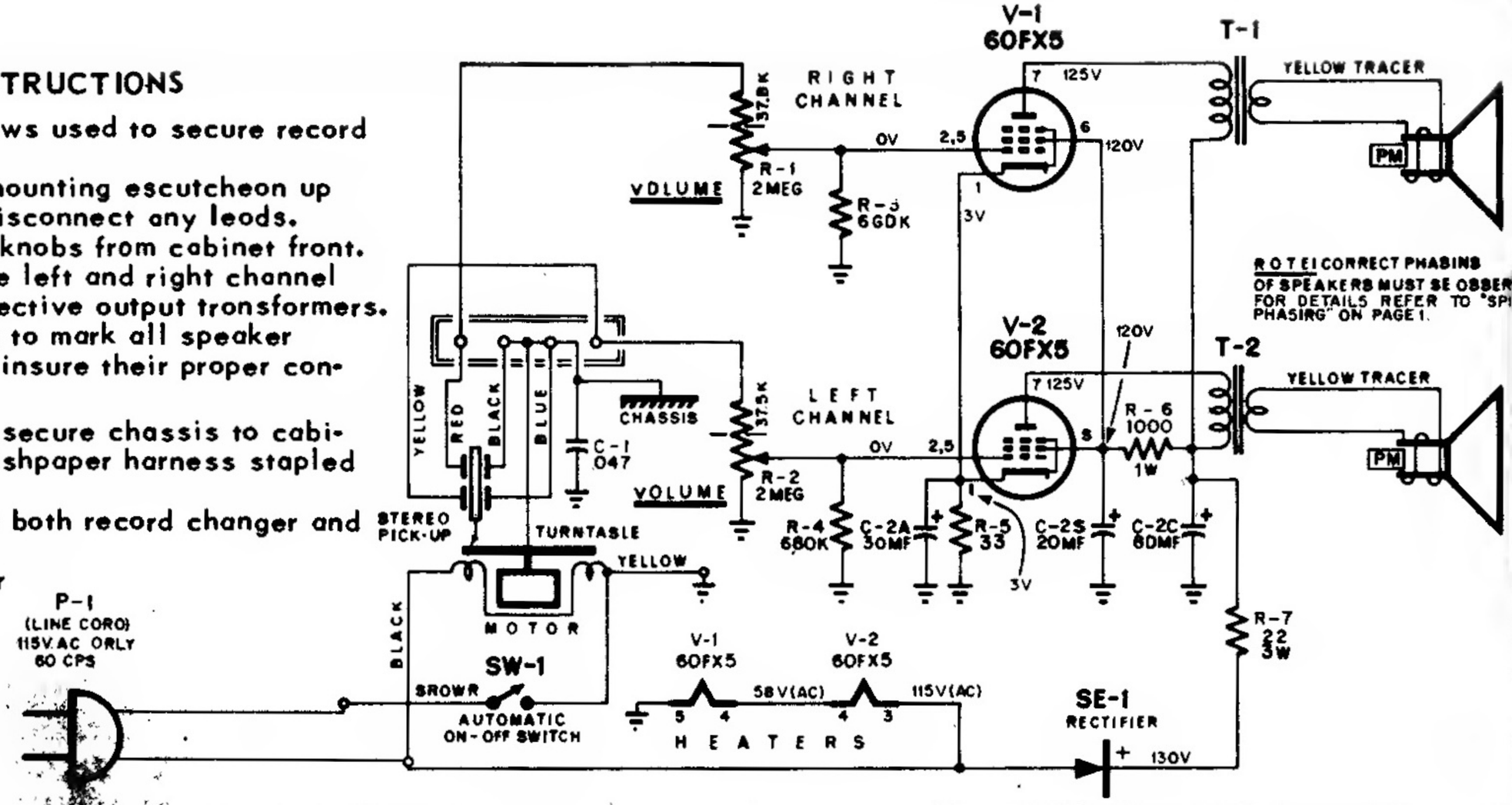
1. Remove 2 Phillips head screws used to secure record changer to cabinet.
2. Lift changer and cardboard mounting escutcheon up and tilt backwards. Do not disconnect any leads.
3. Remove both volume control knobs from cabinet front.
4. Disconnect leads for both the left and right channel loudspeakers from their respective output transformers. NOTE: Care should be taken to mark all speaker leads before disassembly to insure their proper connection during re-assembly.
5. Remove two polnuts used to secure chassis to cabinet and free line cord from fishpaper harness stapled to cabinet.
6. Slide chassis to rear and lift both record changer and chassis from cabinet.
7. Re-assemble in reverse order