EMERSON RADIO Model 999, Chassis 120433B, and Model 999R, Chassis 120433R

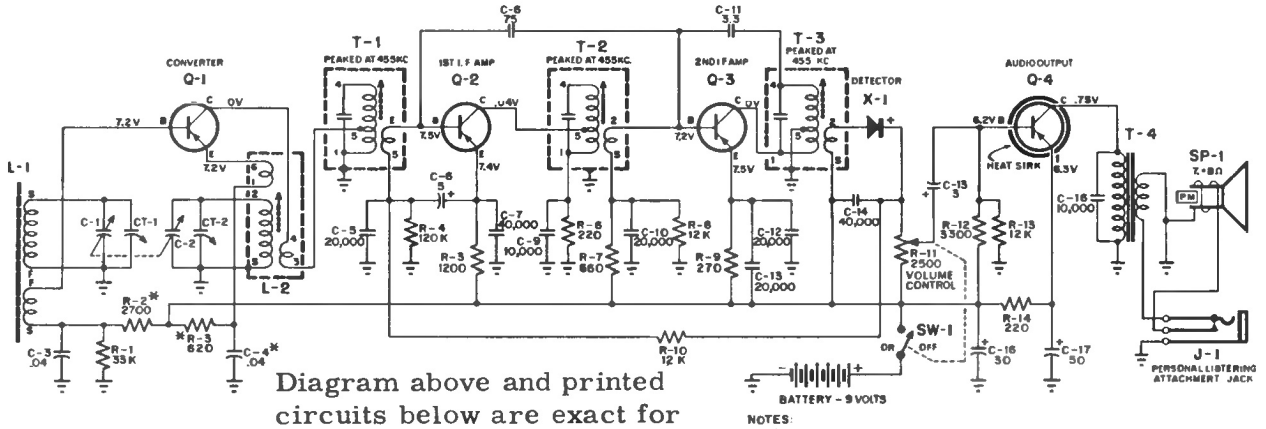

Diagram above and printed circuits below are exact for Chassis 120433B, Model 999.

NOTES:

⊥ SIGNIFIES CERAMIC OR MICA CAPACITORS, CAPACITY IN MICRO-MICROFARADS

⊥ SIGNIFIES TUBULAR CAPACITORS, CAPACITY IN MICROFARADS.
RESISTORS ARE IN OHMS (K=1000 OHMS) AND 1/2 WATT

* SOME SETS WILL USE THE FOLLOWING VALUES.
R-2, 6600Ω
R-3, 2700Ω
C-4, 20,000 (CERAMIC)

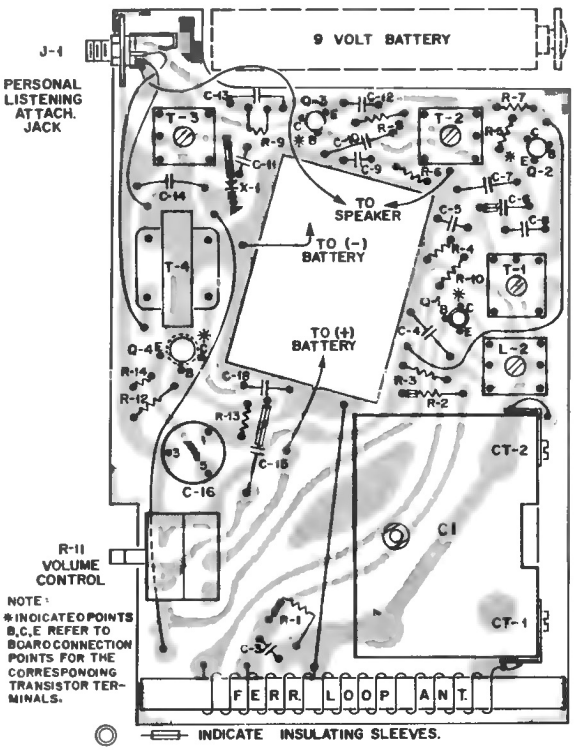

NOTE:
* INDICATED POINTS B,C,E REFER TO BOARD CONNECTION POINTS FOR THE CORRESPONDING TRANSISTOR TERMINALS.

PRINTED CIRCUIT CHASSIS DIAGRAM (TOP VIEW)

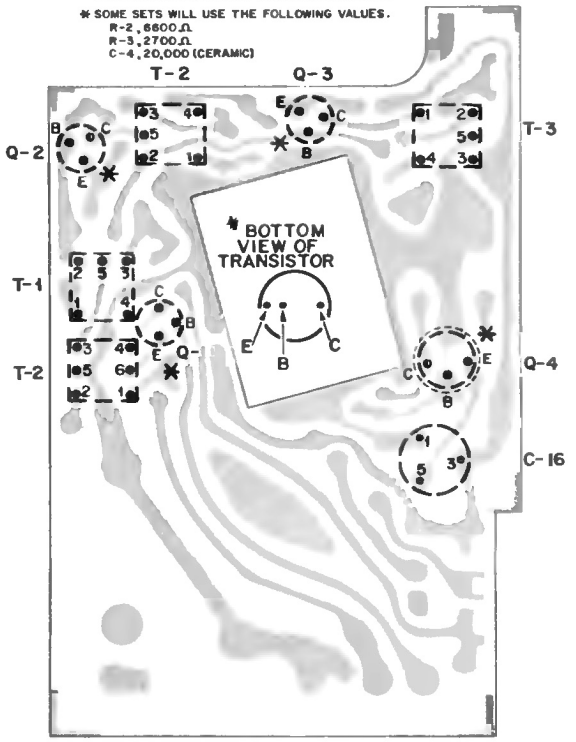

PRINTED CIRCUIT CHASSIS DIAGRAM (BOTTOM VIEW)

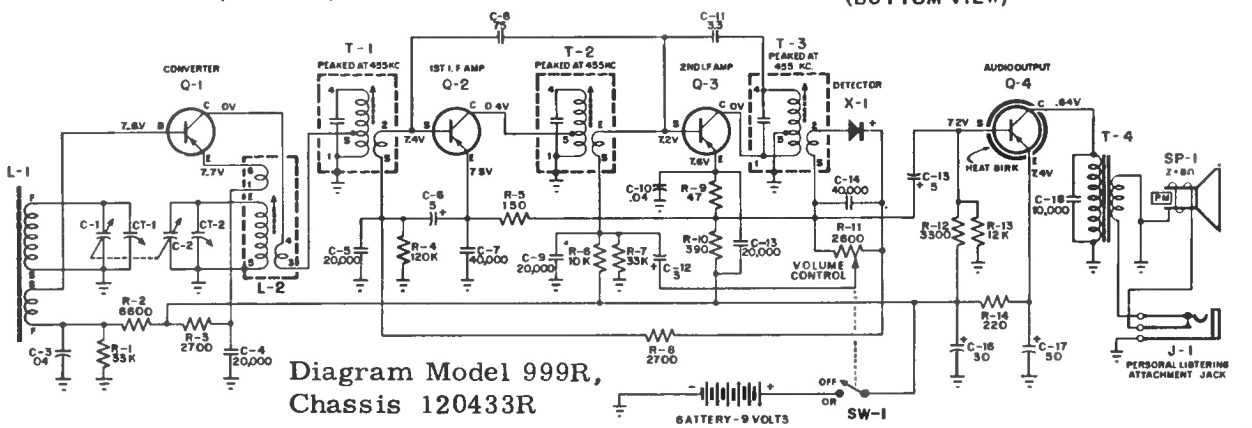

Diagram Model 999R, Chassis 120433R