FADA RADIO & ELECTRIC CO., Inc.
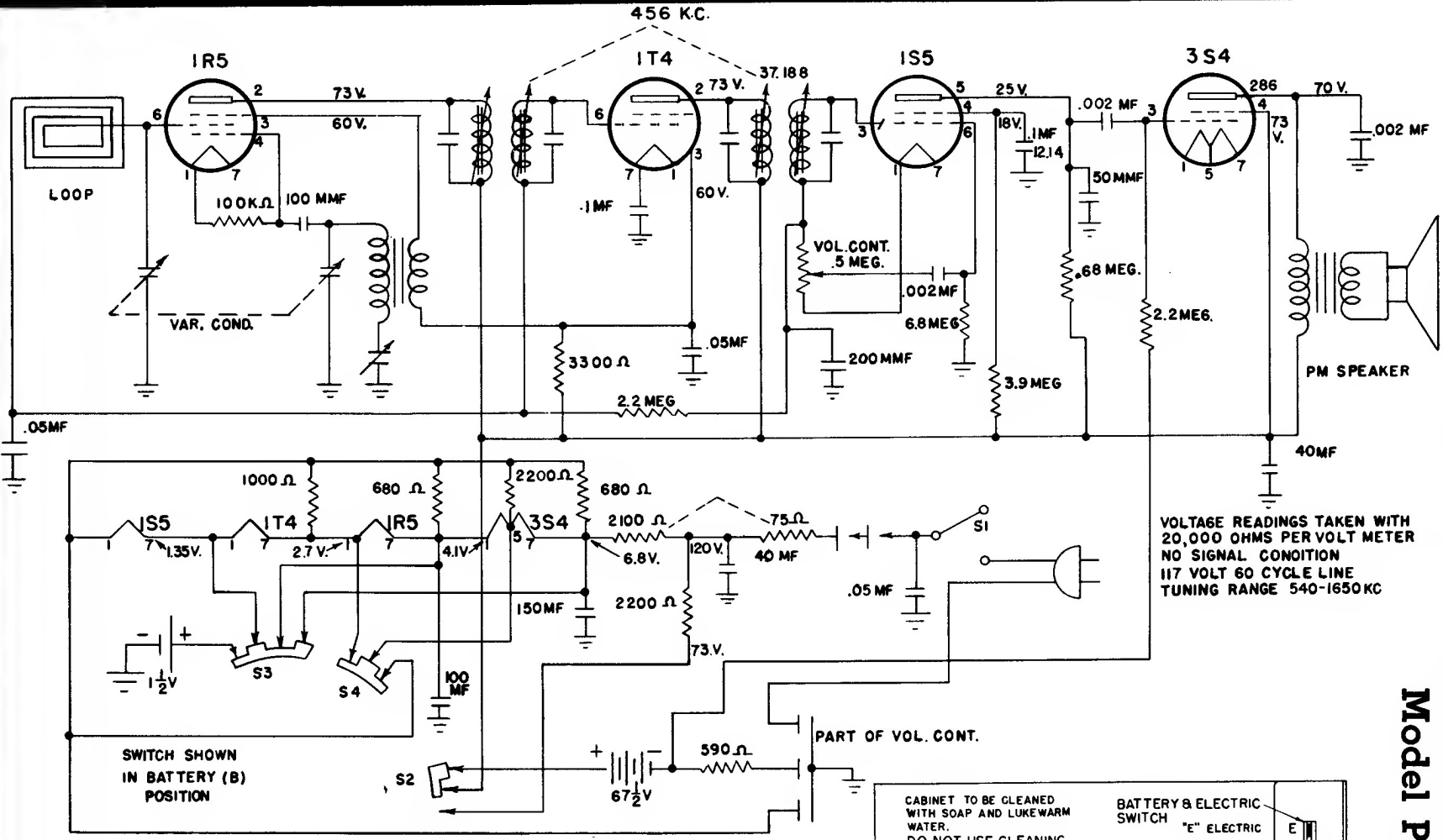
Model P111