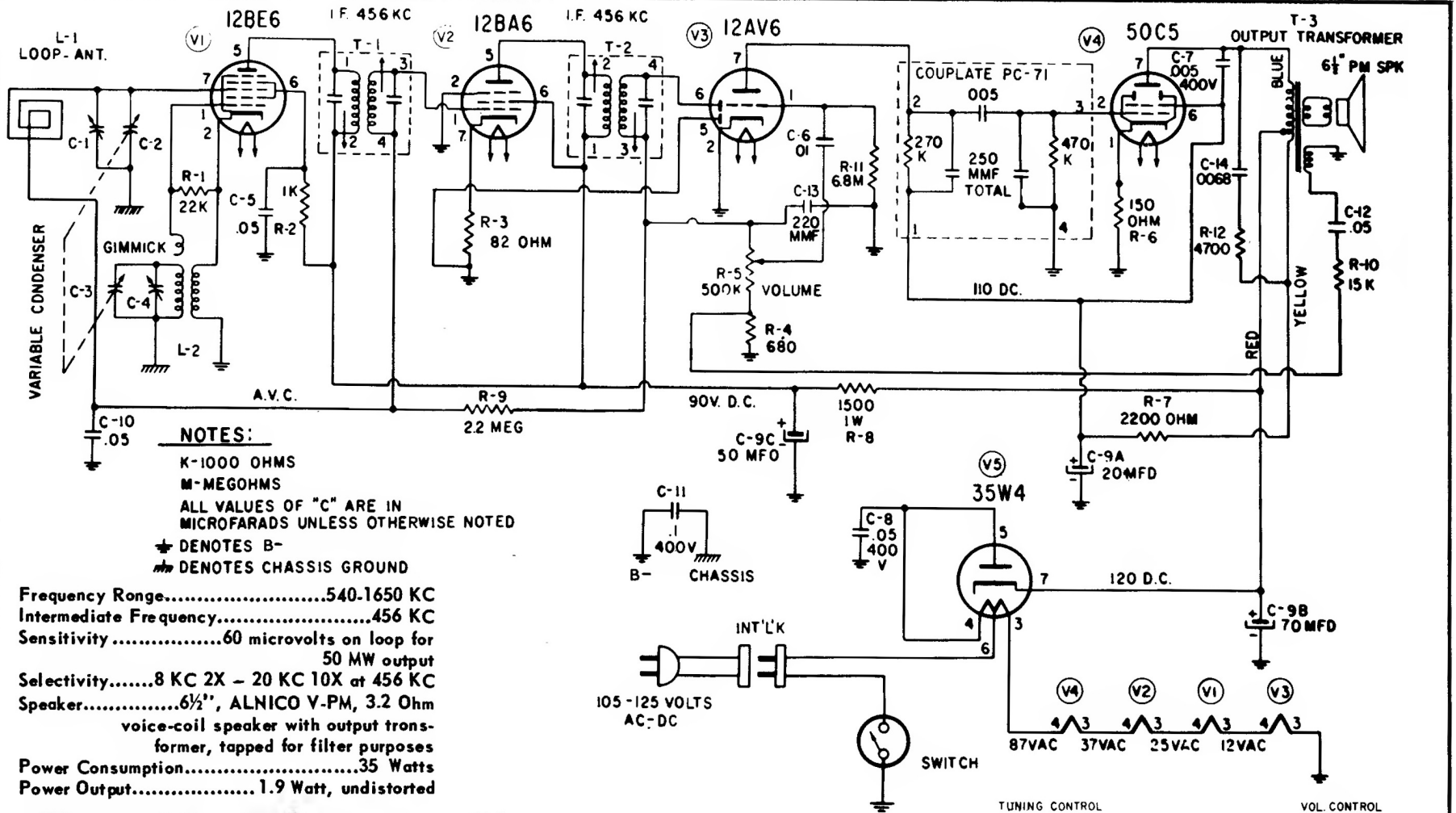

NOTES:

K-1000 OHMS
M-MEGOHMS
ALL VALUES OF "C" ARE IN MICROFARADS UNLESS OTHERWISE NOTED
⏚ DENOTES B-
⏚ DENOTES CHASSIS GROUND

Frequency Range.....540-1650 KC
Intermediate Frequency.....456 KC
Sensitivity.....60 microvolts on loop for 50 MW output
Selectivity.....8 KC 2X – 20 KC 10X at 456 KC
Speaker.....6½", ALNICO V-PM, 3.2 Ohm voice-coil speaker with output transformer, tapped for filter purposes
Power Consumption.....35 Watts
Power Output.....1.9 Watt, undistorted

Gamble-Skogmo, Inc.

CORONADO RADIO

MODEL RA 48-8158A