Gamble-Skogmo, Inc.

This is exact service material for Model RA48-8260A. Model RA48-8261A is practically identical. Model RA48-8266A is similar but uses clock with switching network and has somewhat different parts placement.

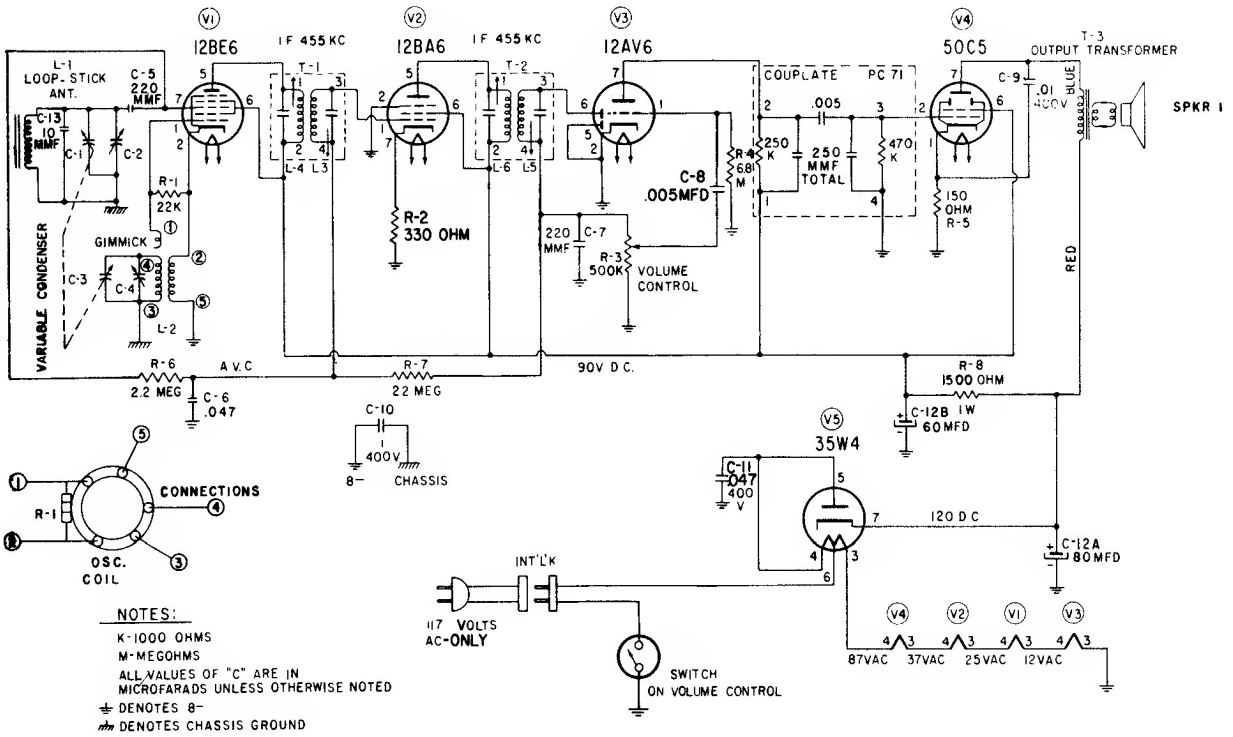

NOTES:

K-1000 OHMS

M-MEGOHMS

ALL VALUES OF "C" ARE IN MICROFARADS UNLESS OTHERWISE NOTED

⏚ DENOTES 8-
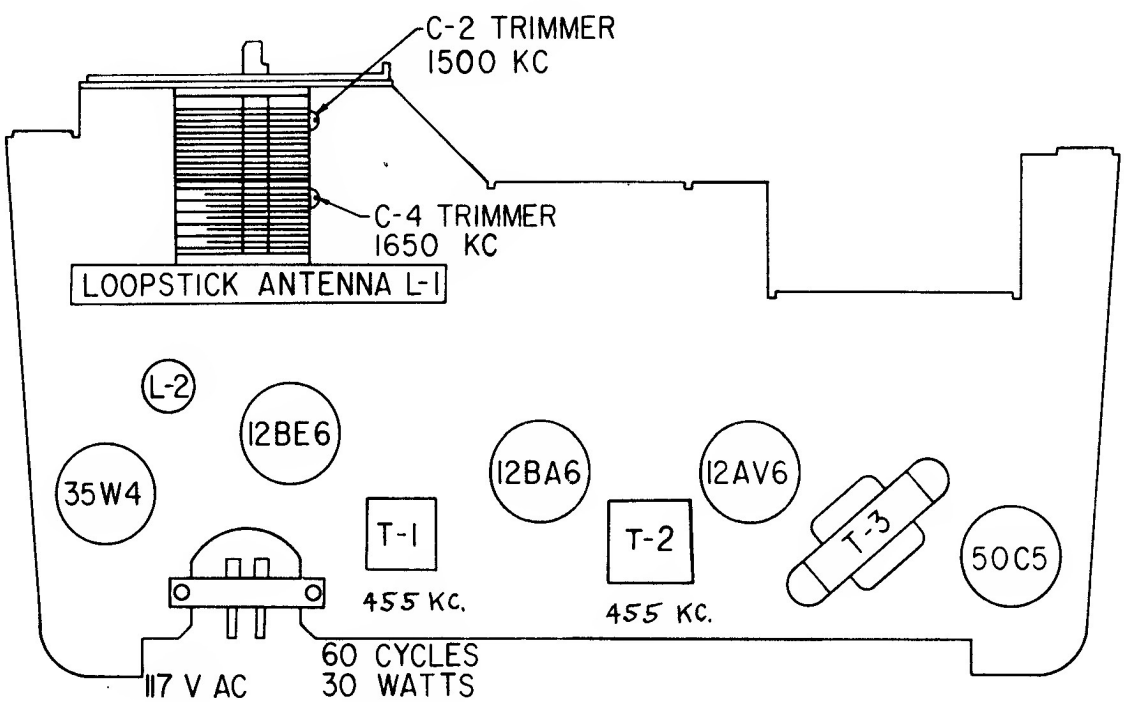
⏚ DENOTES CHASSIS GROUND