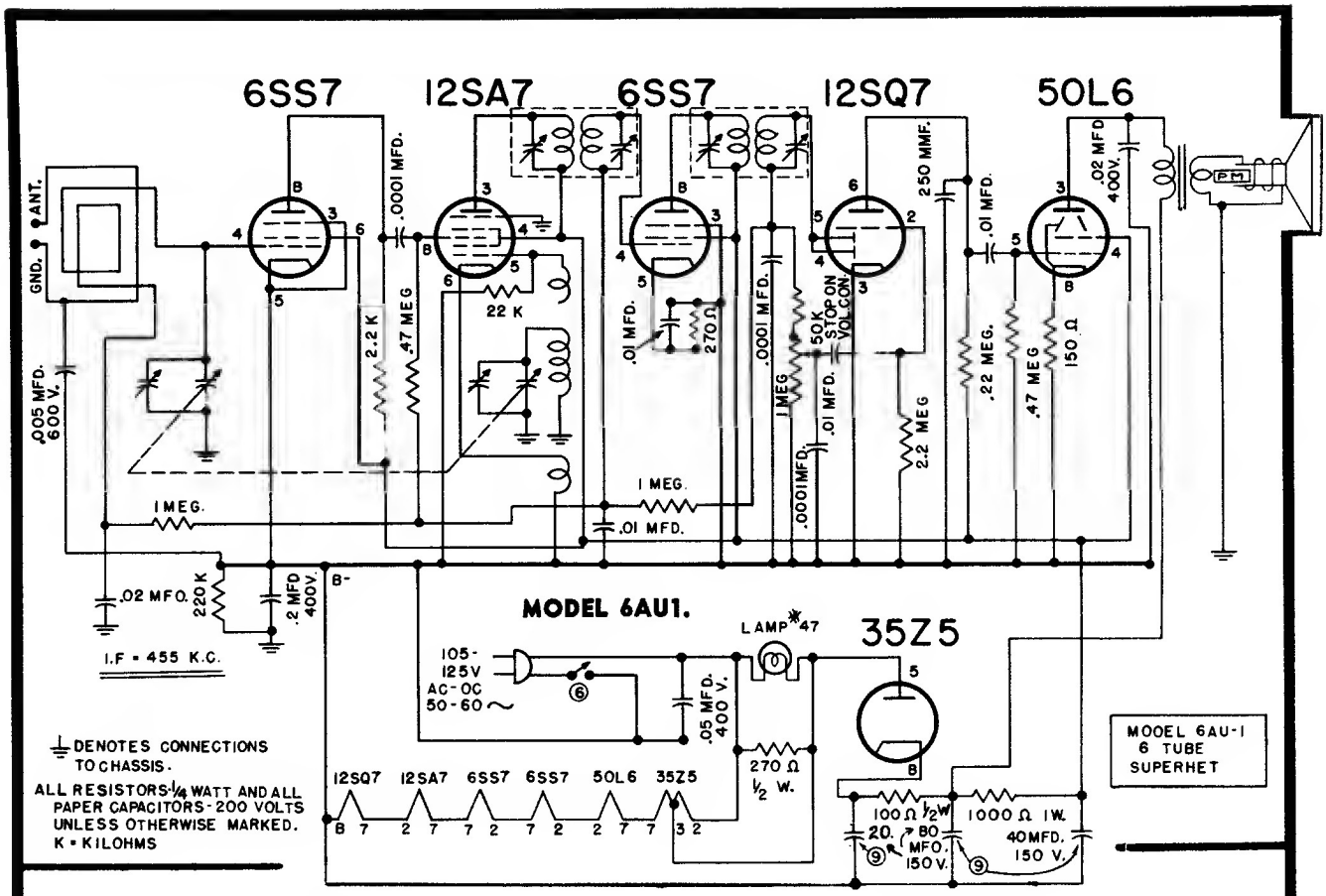

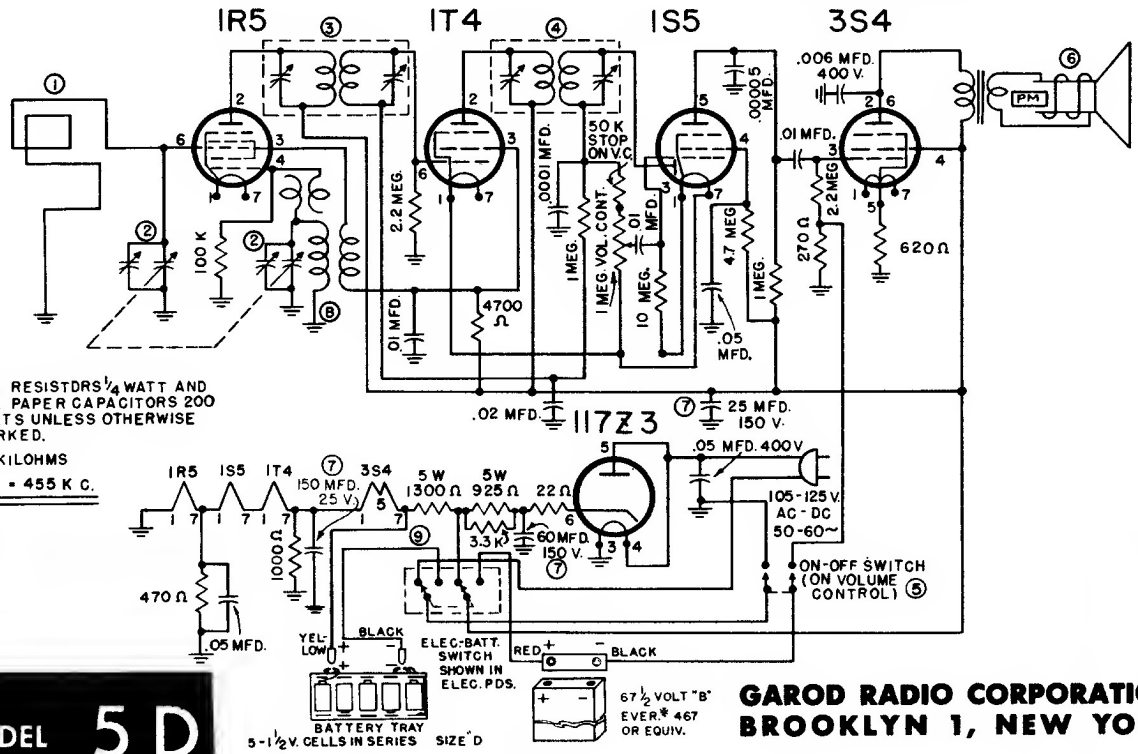

MODEL **5 D**

GAROD RADIO CORPORATION
BROOKLYN 1, NEW YORK

1. 1.437 LOOP ANTENNA
2. 2.203 2GANG VARIABLE CONDENSER
3. 1.412 1ST I.F. TRANSFORMER
4. 1.413 2ND I.F. TRANSFORMER
5. B 200-2 VOLUME CONTROL & SWITCH
6. 30.313 4" P.M. SPEAKER
7. 5.400-3 ELECTROLYTIC CAP. 60-25-150 MFD.
8. 1.414 OSCILLATOR COIL
9. 11.207 ELECTRIC-BATTERY SWITCH

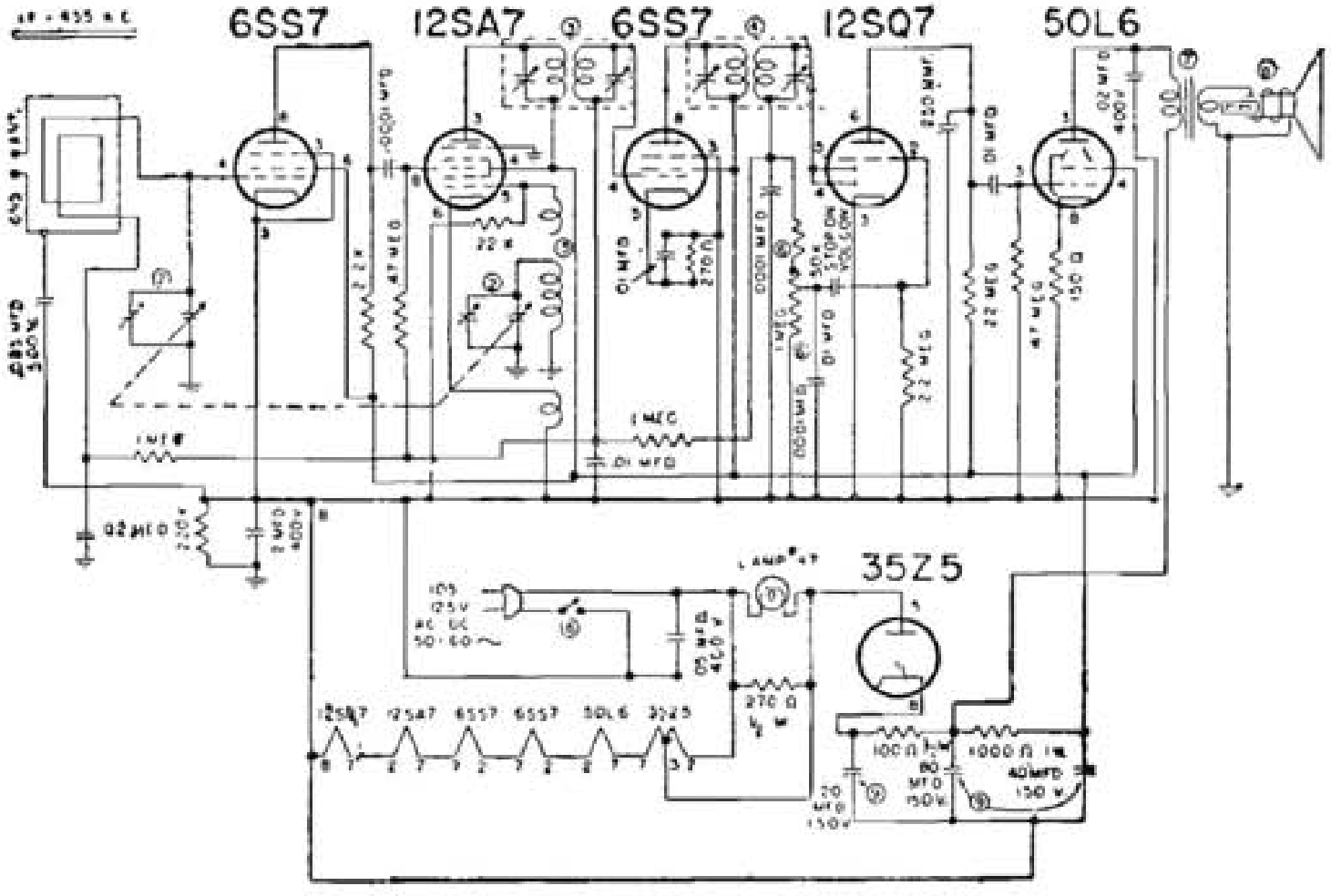

GAROD MOD. 6AU-1

Piccola supereterodina CA/CC, con valvola amplificatrice AF accoppiata a resistenza-capacità, telaio interno e presa d'antenna.