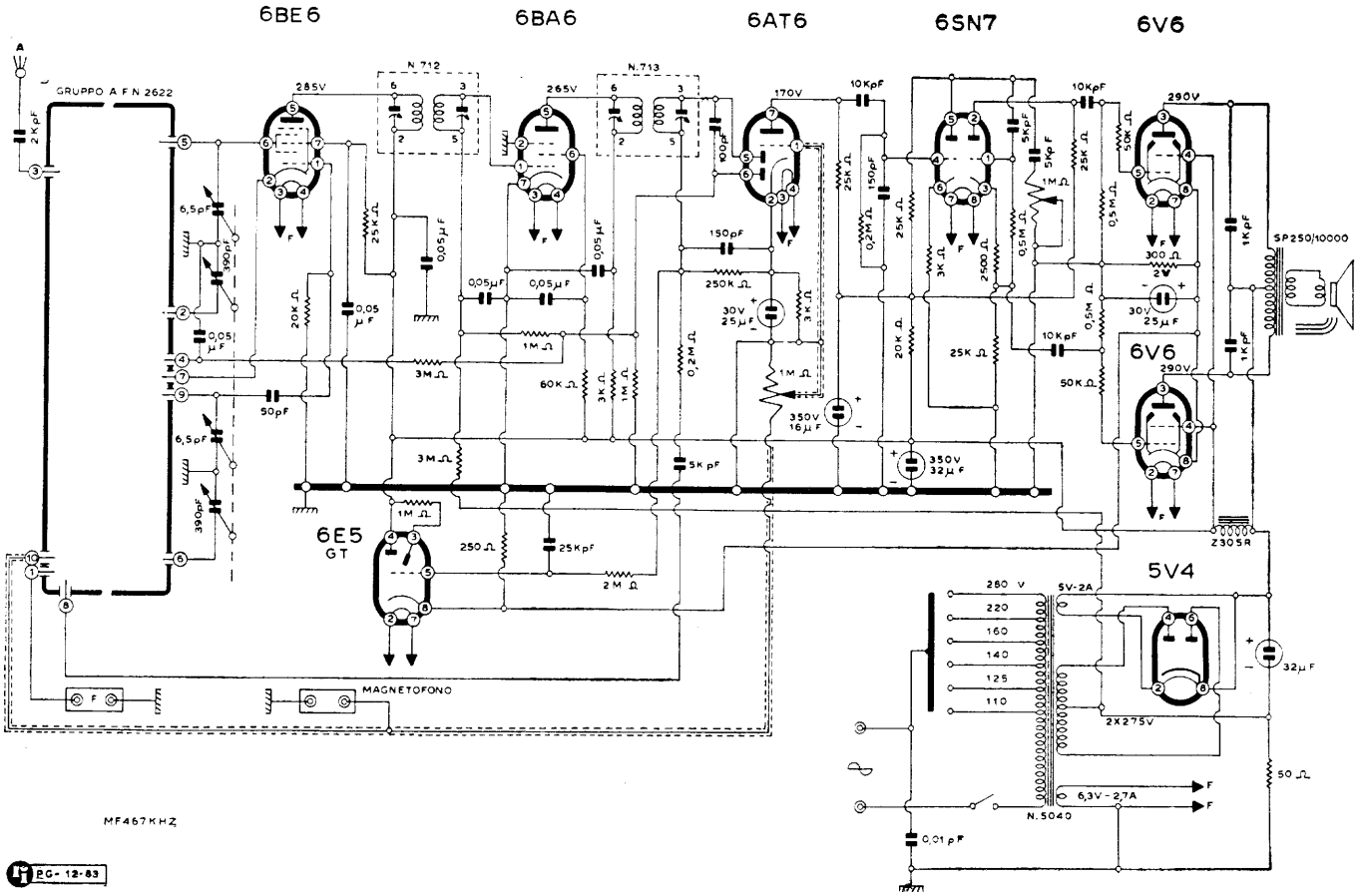GELOSO S.A. - Mod. Super G 701/R