GENERAL ELECTRIC

MODEL 4SJ4A1

Model
4SJ4A1
Playtalk

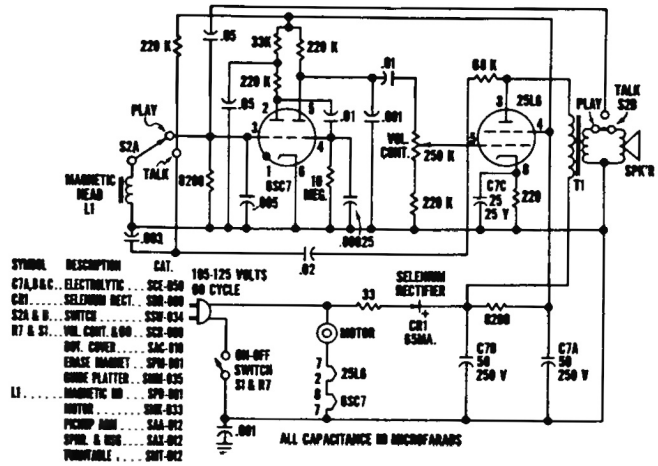

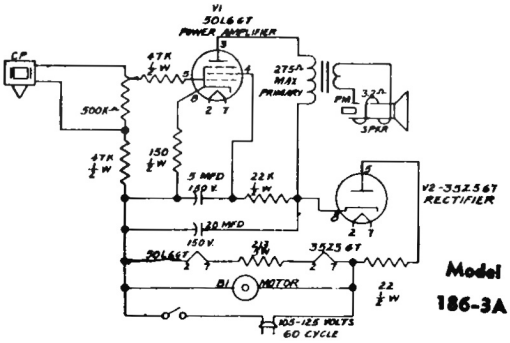

Model
186-3A

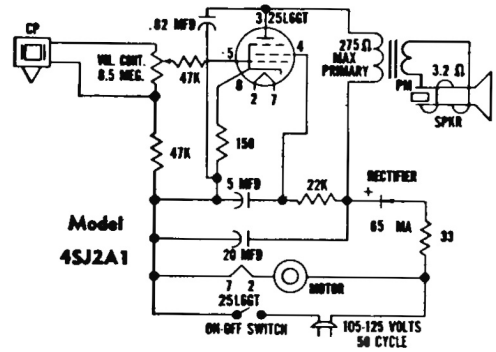

Model
4SJ2A1

MODEL 4SJ3A1
TOY RADIO-PHONOGRAPH
SOCKET VOLTAGE DATA

12SA7	12SQ7	50L6GT	35Z5GT
Pin	Pin	Pin	Pin
1 Gnd	1 Gnd	1 0	1
2 24VAC	2 0	2 24VAC	2 80VAC
3 95V	3 Gnd	3 115V	3 90VAC
4 95V	4 0	4 95V	4
5 6½V	5 0	5 0	5 110VAC
6 0	6 35V	6	6
7 12VAC	7 0	7 75VAC	7 110VAC
8 0	8 12VAC	8 5V	8 120V

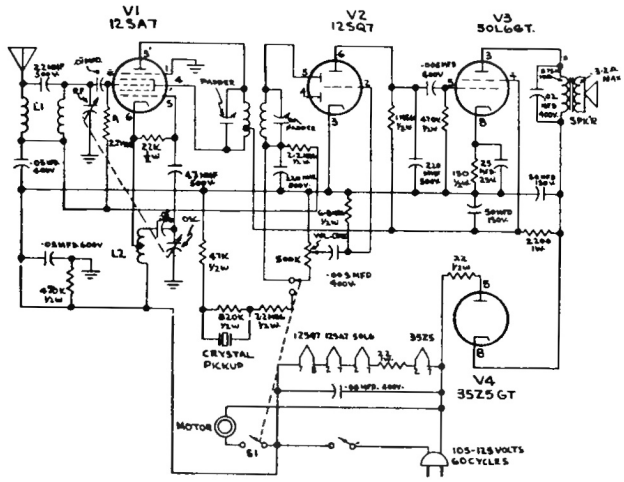

ALIGNMENT INSTRUCTIONS

1. Turn S1 to Radio and volume to maximum. Connect an output meter across the speaker voice coil. Connect generator ground to B- through a .1 mfd. condensor, and the high side to pin 8 of the 12SA7 tube through .03 mfd. Tune generator to 445 kc. and tune T1 trimmers for maximum output reading.
2. Remove generator connection to pin 8, unsolder antenna and attach generator to L1 through 25 mmfd. Turn tuning condenser of set fully open. Set generator to 1620 kc. Tune oscillator trimmer on tuning gang for maximum reading; set R.F. trimmer for maximum output reading. Use only enough generator output to get a reading on the output meter.