GENERAL ELECTRIC COMPANY

Models C-400A, C-401A

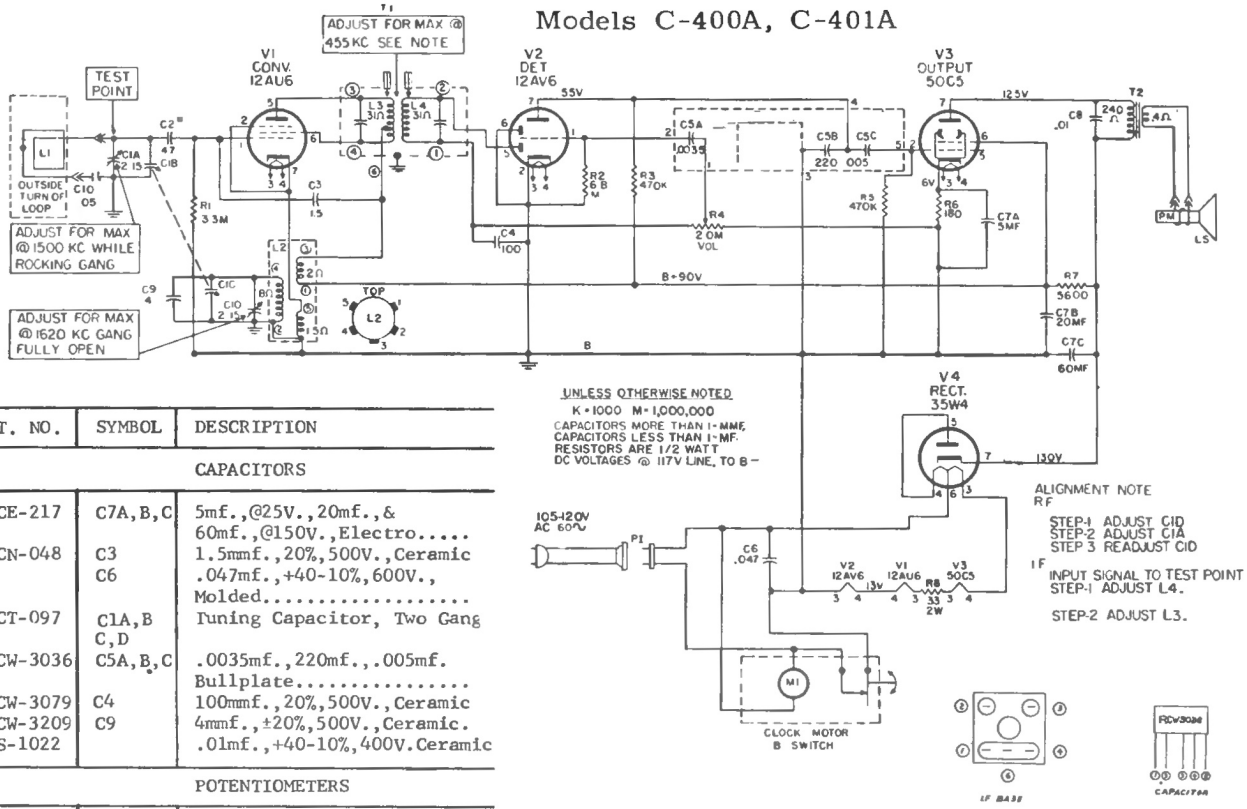

CAT. NO.	SYMBOL	DESCRIPTION
		CAPACITORS
RCE-217	C7A,B,C	5mf.,@25V.,20mf.,& 60mf.,@150V.,Electro.....
RCN-048	C3 C6	1.5mmf.,20%,500V.,Ceramic .047mf.,+40-10%,600V., Molded.....
RCT-097	C1A,B C,D	Tuning Capacitor, Two Gang
RCW-3036	C5A,B,C	.0035mf.,220mf.,.005mf. Bullplate.....
RCW-3079	C4	100mmf.,20%,500V.,Ceramic
RCW-3209	C9	4mmf.,±20%,500V.,Ceramic.
RS-1022		.01mf.,+40-10%,400V.Ceramic
		POTENTIOMETERS
RS-1028	R4	Volume Control 2 meg.....
		COILS & TRANSFORMERS
RLC-135	L2	Oscillator Coil C400.....
RS-1414	L2	Oscillator Coil C401.....
RS-1027	T1	I.F. Trans. C400-C401....
RTO-176	T2	Output Trans. C400-C401..

TO REMOVE CHASSIS FROM CABINET:

Remove cabinet back and interlock. Remove the five self-tapping screws (hex heads), one on each corner of the chassis, and the single hex screw just below the tuning gang capacitor. Pull off the volume control knob.

The tuning control knob is a captive knob which remains with the cabinet. The chassis must be pulled out of the cabinet and separated from the tuning knob simultaneously. When pulling out the chassis, first close the tuning capacitor, grasp the tuning capacitor with the thumb and forefinger of one hand and the tuning knob with the other and pull the chassis out of the cabinet.

CAUTION:
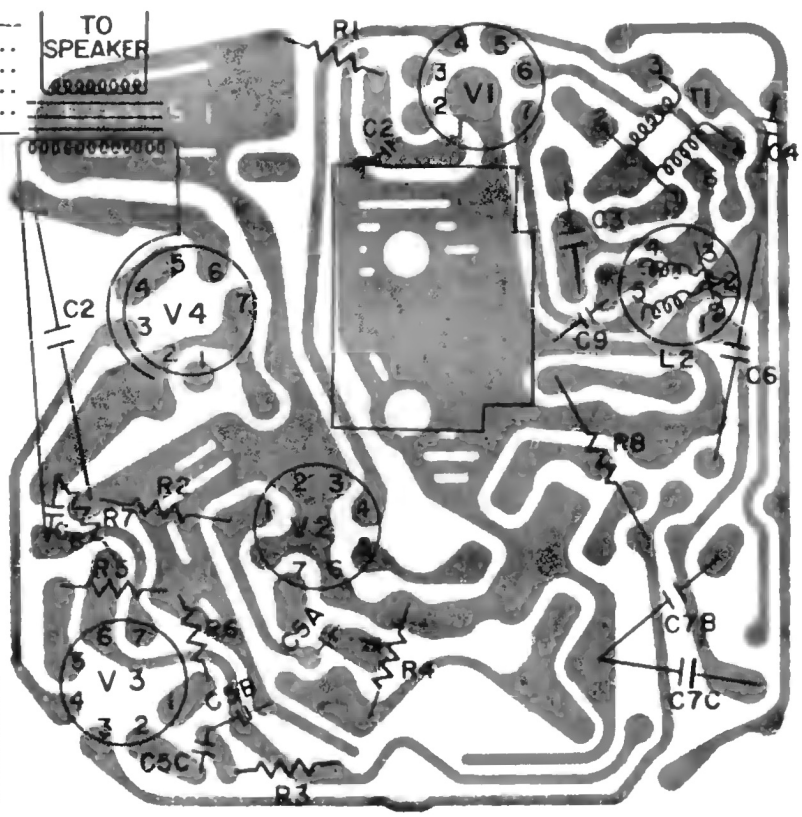
It is important to use extreme care while replacing parts and or soldering on this chassis. Too much heat on the chassis will cause the copper plating to become unbonded. Only apply the soldering iron long enough to melt the solder and pull out the part to be replaced. A 35 watt soldering iron is recommended.