# GENERAL ELECTRIC

## Models C420 and C421

### TO REMOVE SPEAKER

1. Follow steps 1 through 5 as above.
2. Remove the 4 hexhead screws from around speaker. This will remove the speaker and speaker grille.

### TO REMOVE CHASSIS

1. Remove volume and tuning knobs.
2. Unscrew alarm set indicator knob (Rear)
3. Remove back of cabinet.
4. Unsolder leads from speaker.
5. Remove the cabinet top.
6. Remove the cabinet bottom.
   Timer leads should remain connected, as they are long enough to allow removal of radio for repair.

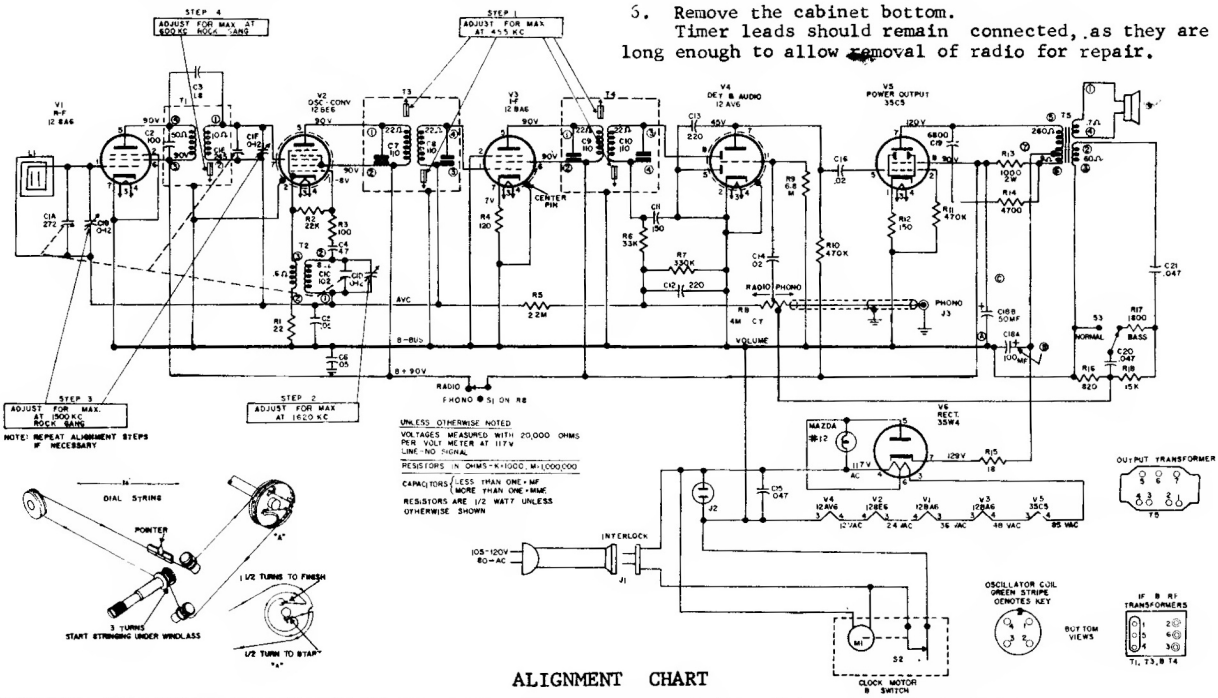


### ALIGNMENT CHART

| Step | Connect Test Oscillator | Test Oscillator Setting | Receiver Tuning | Adjust for Maximum Output |
|---|---|---|---|---|
| 1. | 12BA6, V3 grid (pin 1) in series with a .05 mf. | 455KC. | Tuning Gang Open (minimum capacity) | Cores of 2nd I. F. Transformer T4 |
| 2. | 12BE6, V2 grid (pin 7) in series with a .05 mf. | | | Cores of 1st I. F. Transformer T3 |
| 3. | | | | Recheck adjustment of T3 and T4 |
| 4. | Inductively Coupled to Antenna L1 | 1620 KC | Tuning gang open | C1D Oscillator trimmer |
| 5. | | 1500 KC | Tune for max. signal | C1F, R.F. Trimmer |
| 6. | | | | C1B, Antenna trimmer |
| 7. | | Approximately 600 KC. | Rock in With core Of T1 | cores of R. F. Transformer, T1. Rock in with receiver tuning |
| 8. | Repeat Steps 4,5,6,7 | | | |