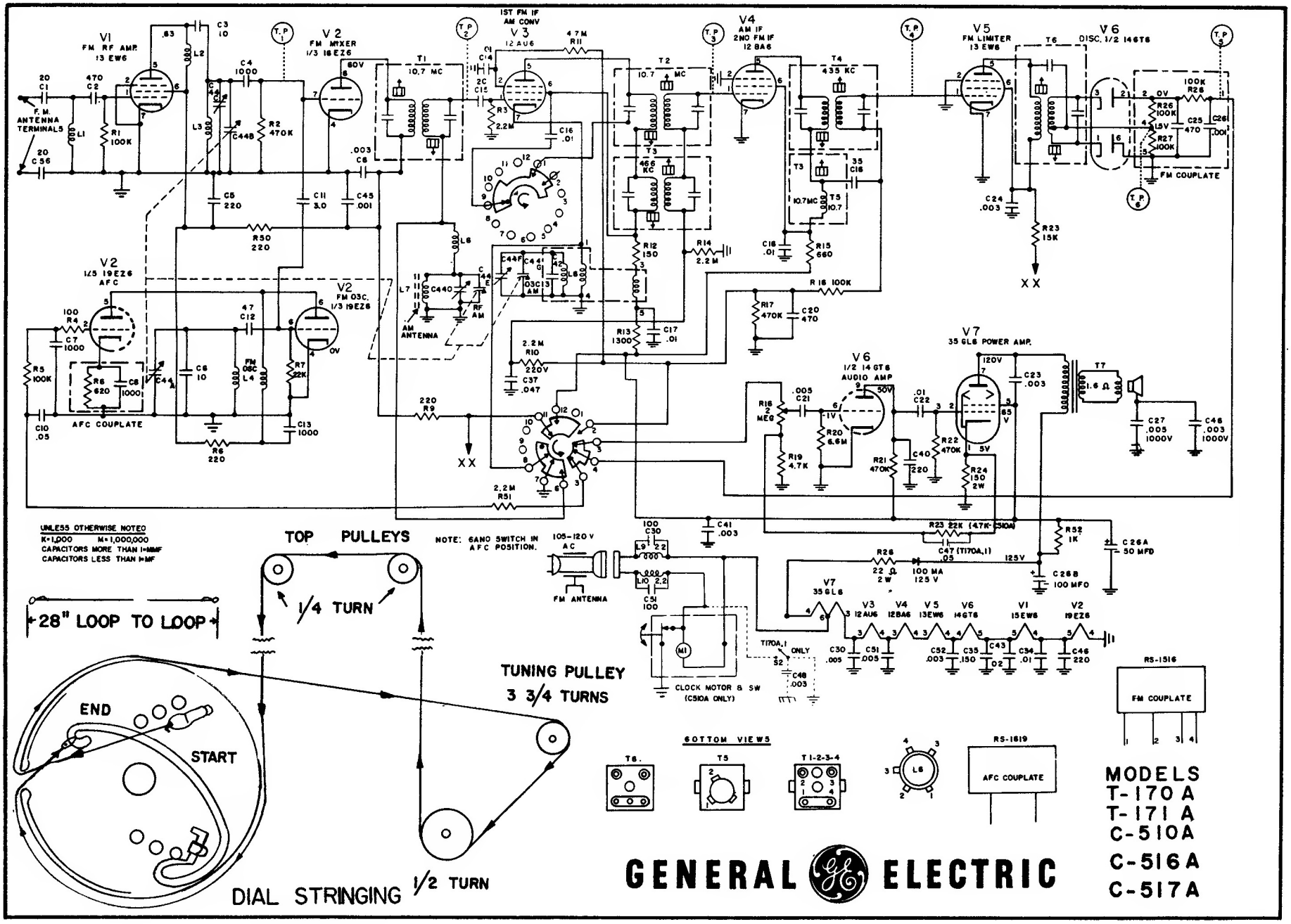
V1 FM RF AMP. 13 EW6
V2 FM MIXER 1/3 18EZ6
1ST FM IF AM CONV V3 12 AU6
V4 AM IF 2ND FM IF 12 BA6
V5 FM LIMITER 13 EW6
V6 DISC. 1/2 14GT6
V2 1/5 19EZ6 AFC
V2 FM OSC. 1/3 19EZ6
V6 1/2 14GT6 AUDIO AMP
V7 35 GL6 POWER AMP.
F.M. ANTENNA TERMINALS
AM ANTENNA
RF AM
AFC COUPLATE
FM COUPLATE
XX
UNLESS OTHERWISE NOTED
K=1,000 M=1,000,000
CAPACITORS MORE THAN 1MMF
CAPACITORS LESS THAN 1MF
NOTE: 6AN0 SWITCH IN AFC POSITION.
105-120 V AC
FM ANTENNA
CLOCK MOTOR & SW (C510A ONLY)
T170A,1 ONLY
TOP PULLEYS
1/4 TURN
28" LOOP TO LOOP
TUNING PULLEY 3 3/4 TURNS
END
START
DIAL STRINGING
1/2 TURN
BOTTOM VIEWS
T6
T5
T1-2-3-4
L6
RS-1619
AFC COUPLATE
RS-1516
FM COUPLATE
MODELS
T-170 A
T-171 A
C-510A
C-516A
C-517A
GENERAL ELECTRIC