GENERAL ELECTRIC

MODELS T215A, T216A, T265A, T266A, C540A and C541A

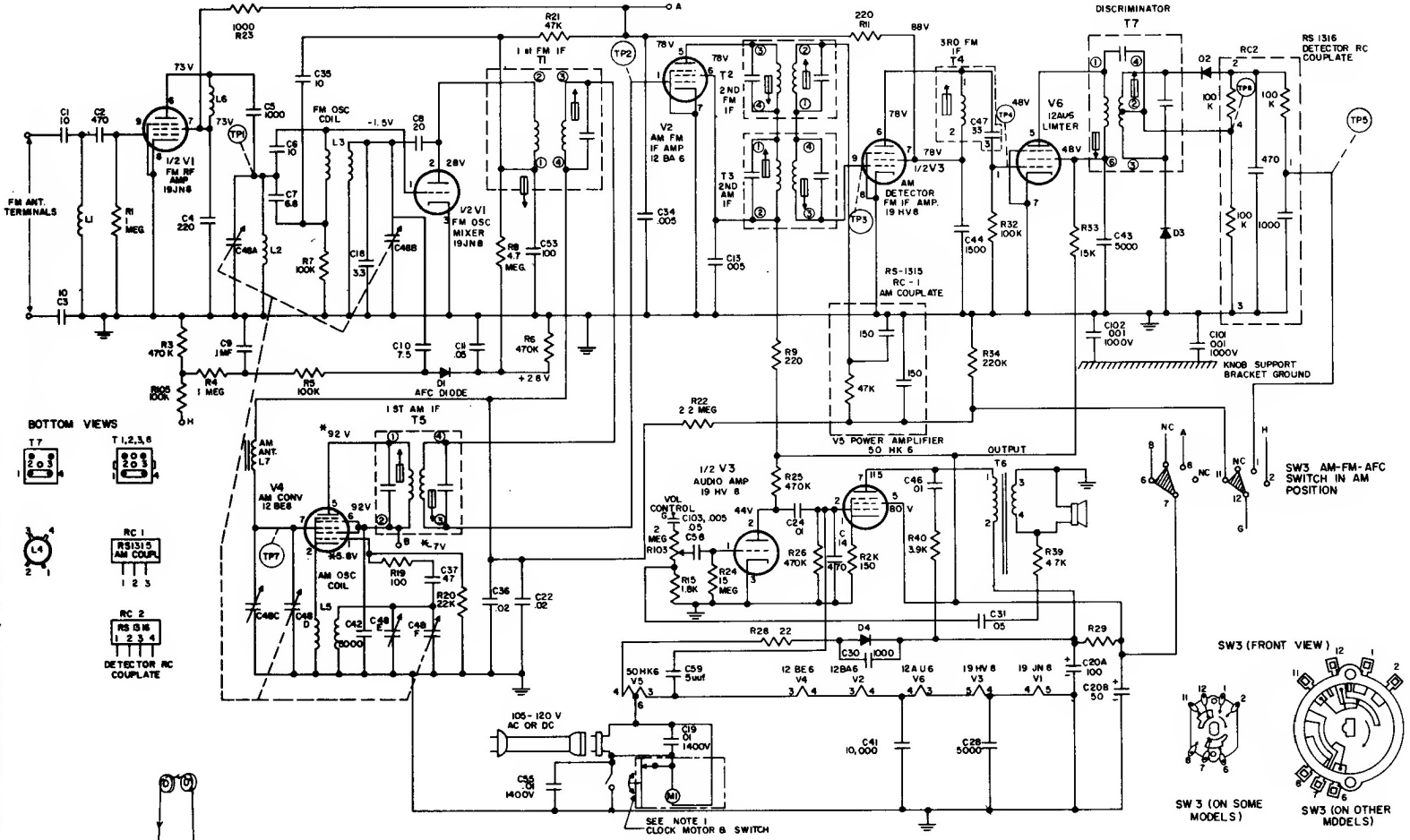

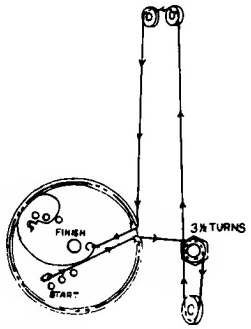

STRINGING DIAGRAM

UNLESS OTHER WISE NOTED
K= 1000 M= 1,000,000
CAP MORE THAN 1 = MMF
CAP LESS THAN 1 = MF

VOLTAGE READING TAKEN WITH-VTVM
1. 120V AC INPUT
2. SET IN FM POSITION
3. VOLUME CONTROL AT MIN.
4. TUNING GANG SET TO 108 MC
* SET IN AM POSITION

NOTE
1. USE ONLY ON C540A AND C541A

ELECTRICAL RATING: 105 - 120 Volts AC, 30 Watts

TUNING RANGE:	AM 540 - 1600 KC FM 88 - 108 MC
I. F. :	AM 455 KC FM 10.7 MC
POWER OUTPUT:	Undistorted .8 Watt Maximum 1.5 Watts