GENERAL ELECTRIC

Models T295A and C555A

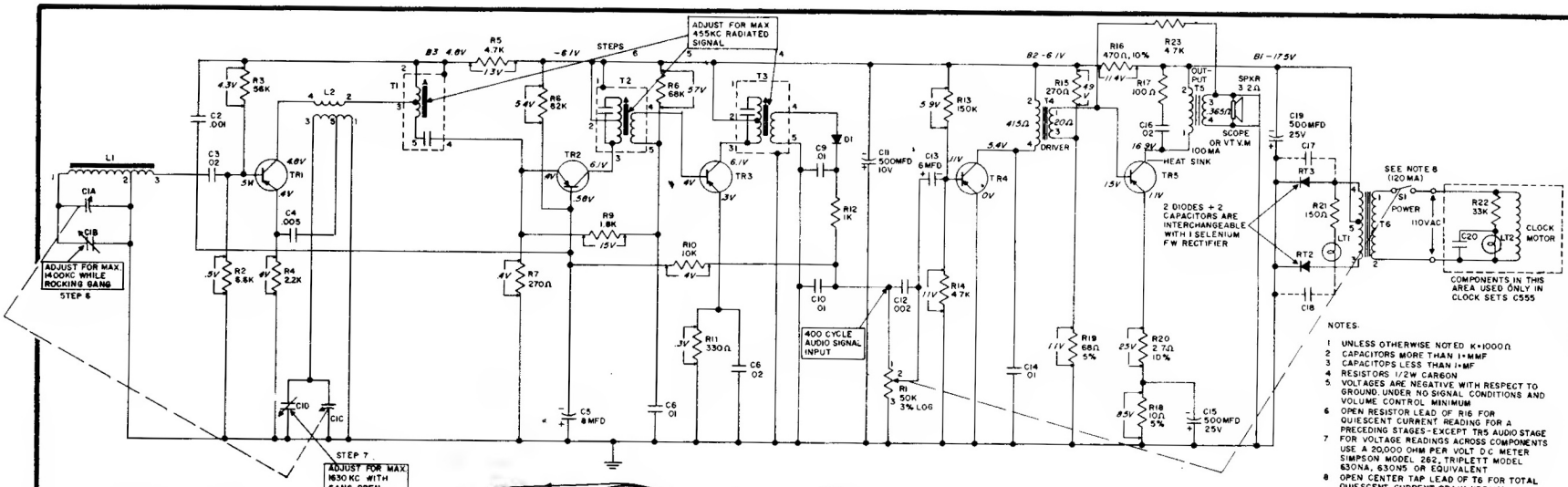

NOTES:

1. UNLESS OTHERWISE NOTED K=1000Ω
2. CAPACITORS MORE THAN 1=MMF
3. CAPACITORS LESS THAN 1=MF
4. RESISTORS 1/2W CARBON
5. VOLTAGES ARE NEGATIVE WITH RESPECT TO GROUND, UNDER NO SIGNAL CONDITIONS AND VOLUME CONTROL MINIMUM
6. OPEN RESISTOR LEAD OF R16 FOR QUIESCENT CURRENT READING FOR A PRECEDING STAGES-EXCEPT TR5 AUDIO STAGE
7. FOR VOLTAGE READINGS ACROSS COMPONENTS USE A 20,000 OHM PER VOLT D.C METER SIMPSON MODEL 262, TRIPLETT MODEL 630NA, 630N5 OR EQUIVALENT
8. OPEN CENTER TAP LEAD OF T6 FOR TOTAL QUIESCENT CURRENT DRAIN (120MA)

ALIGNMENT

1. SET VOLUME CONTROL AT MAXIMUM
2. CONNECT OUTPUT METER OR SCOPE ACROSS VOICE COIL
3. INDUCTIVELY COUPLE SIGNAL GENERATOR TO RECEIVER

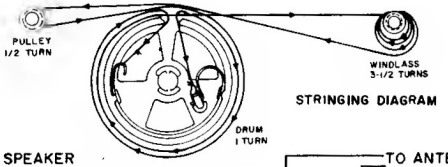

STRINGING DIAGRAM

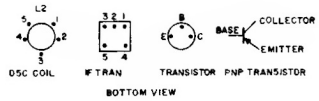

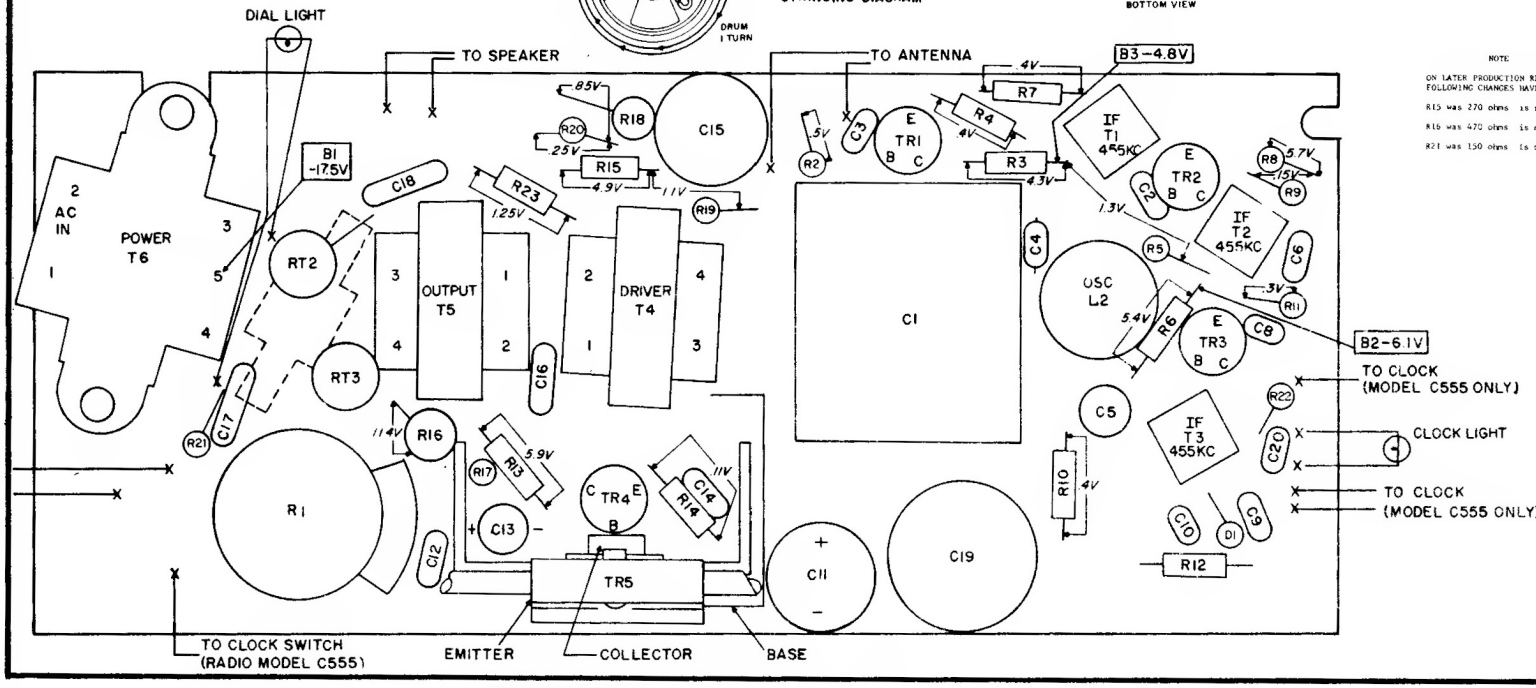

NOTE

ON LATER PRODUCTION RECEIVERS THE FOLLOWING CHANGES HAVE BEEN MADE.

R15 was 270 ohms is now 220 ohms

R16 was 470 ohms is now 330 ohms

R21 was 150 ohms is now 180 ohms

COMPONENT LAYOUT DIAGRAM (TOP VIEW)

RADIO MODELS T295 AND C555