GENERAL ELECTRIC

Models P765A, -B, and P766A, -B

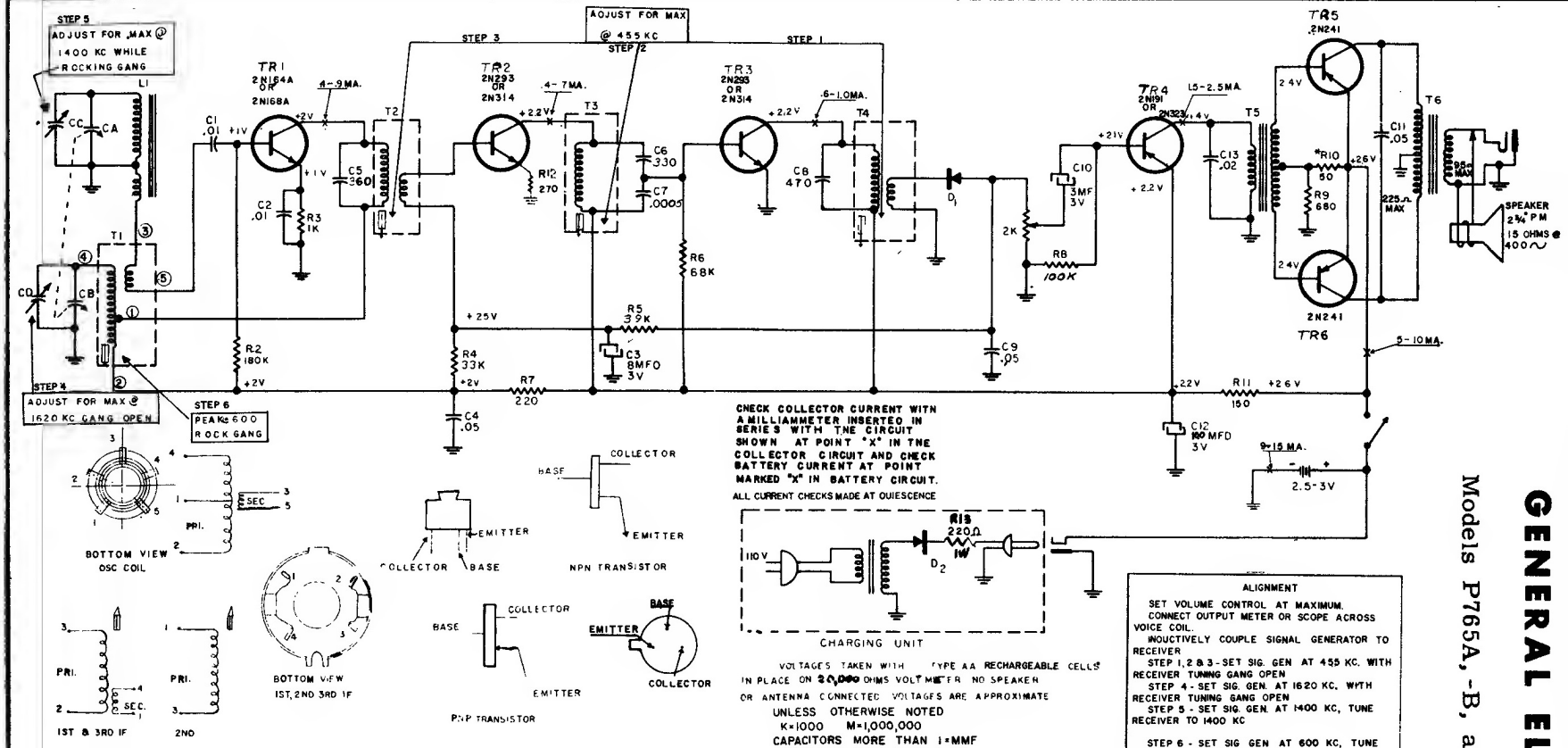

TROUBLE SHOOTING HINTS

Total battery drain used by the receiver will give an indication of whether the transistors are operating normally. This current check is made at quiescence. This means the volume control should be all the way open, the tuning gang all the way closed, and with no signal or noise being picked up.

With the radio controls set accordingly, a current flow check between the battery end cap and the negative end of the battery should indicate properly operating transistors. If excessive total current is noted when this check is made, individual current checks should be made at the collector section of the suspected transistors.

We are including in the schematic of this radio the proper current ranges found at the various check points. A properly operating stage should not vary from these readings. An excessive current reading will likely mean a shorted transistor.

TO REMOVE CHASSIS FROM CASE

1. Remove the end cap on the speaker end of the radio the same as you would to change the batteries. Do not unsolder the wire attached to the end cap, but unsolder the wire from the chassis bracket to the case.
2. With a pair of longnose pliers, straighten the metal tab holding the speaker grille in place.
3. Remove the speaker grille by folding it up and toward the opposite end of the case.
4. Using care, pull out the speaker and unsolder the two leads.
5. Remove the volume knob by pulling it off. Turn the screw in the center of the tuning dial in a counterclockwise direction to remove it, then pull off the tuning knob.
6. Take out the screw near the tuning shaft hole, also the screw on the end cap tuning dial end.