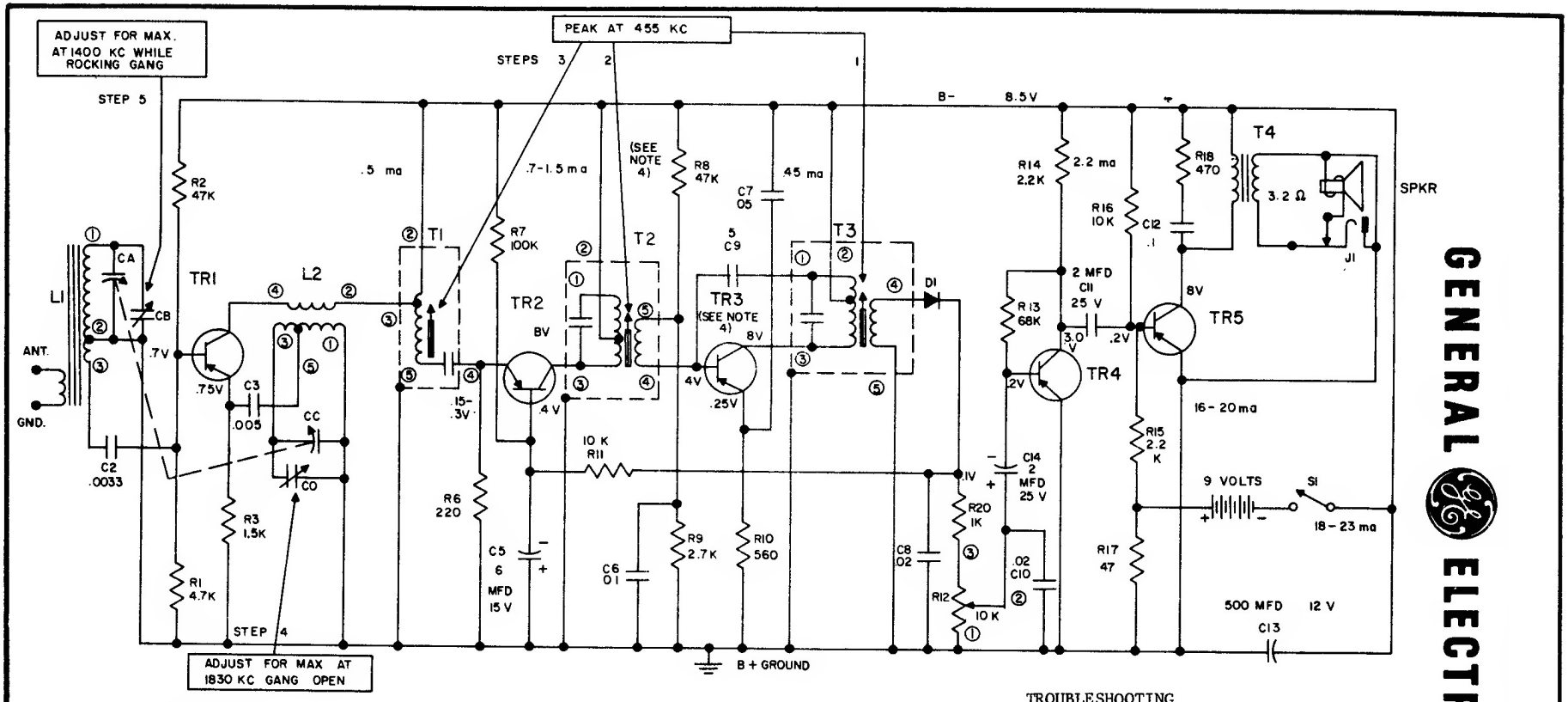

GENERAL ELECTRIC

MODELS P810A P811A

ALIGNMENT

SET VOLUME CONTROL AT MAXIMUM.
CONNECT OUTPUT METER OR SCOPE ACROSS VOICE COIL.
INDUCTIVELY COUPLE SIGNAL GENERATOR TO RECEIVER.

NOTES:

1. UNLESS OTHERWISE NOTED:
   CAPACITORS MORE THAN 1 = MMF
   CAPACITORS LESS THAN 1 = MF
   RESISTORS ARE 1/4 WATT AND K = 1000
2. VOLTAGES AND CURRENT READINGS ARE AVERAGE UNDER NO SIGNAL CONDITIONS. VOLTAGES ARE NEGATIVE WITH RESPECT TO GROUND.
3. REPLACE WITH TRANSISTOR TYPES SHOWN IN PARTS LIST.
4. R8 IS 33K WHEN TR3 IS RS-5304.

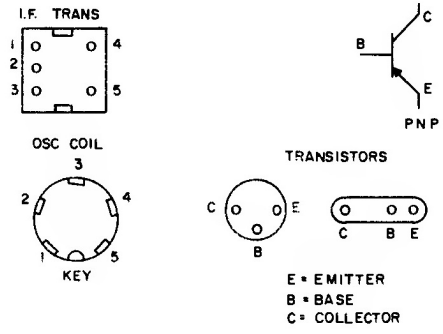

BOTTOM VIEWS

TROUBLESHOOTING

A check of battery condition and total current drain of the receiver should be made first. All current measurements are made at quiescence with the receiver turned on, volume control at minimum, tuning gang closed, and with no-signal conditions.

The total quiescent receiver current drain is from 18 to 23 ma. This is measured by inserting a milliammeter in series with the batteries.

If an excessive total quiescent current drain is recorded, the individual collector currents of each transistor should be checked. An excessive current reading may mean a shorted transistor; no current will indicate that a transistor or associated circuit component is defective.