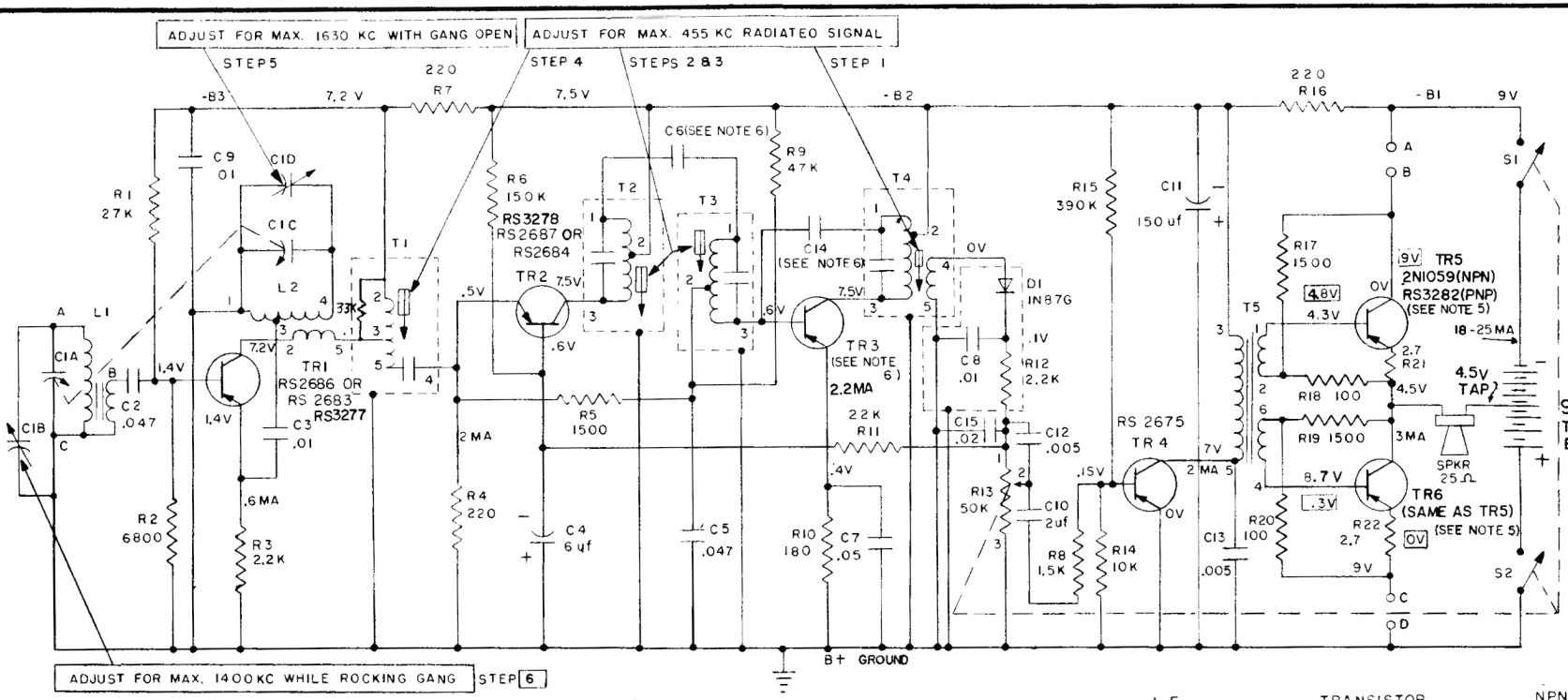

ALIGNMENT

SET VOLUME CONTROL AT MAXIMUM. CONNECT OUTPUT METER OR SCOPE ACROSS VOICE COIL.

INDUCTIVELY COUPLE SIGNAL GENERATOR TO RECEIVER.

NOTES.

1. UNLESS OTHERWISE NOTED— CAPACITORS MORE THAN 1 = MMF CAPACITORS LESS THAN 1 = MF RESISTORS ARE 1/2 WATT K = 1000
2. VOLTAGES ARE NEGATIVE WITH RESPECT TO GROUND UNDER NO SIGNAL CONDITIONS AND VOLUME CONTROL MINIMUM.
3. REPLACE TRANSISTORS WITH TYPES SHOWN
4. VOLTAGES SHOWN IN ▭ ARE WITH TR5 & TR6 PNP.
5. WHEN TR5 & TR6 ARE NPN, JUMPER B TO D & A TO C. WHEN TR5 & TR6 ARE PNP, JUMPER A TO B & C TO D.
6. WHEN TR3 IS RS 2688, C6 IS 2.0 & C14 IS 3. WHEN TR3 IS RS 2685, C6 IS 1.5 & C14 IS 5.6 " " " RS3279 " " " " " " "

CHASSIS REMOVAL

1. Remove knobs.
2. Remove battery compartment.
3. Remove 4 1/4" hex-head screws from circuit board (with 1/4" spintite).
4. Remove 1/4" hex-head screws from tuning capacitor and volume control brackets (with 1/4" spintite).
5. Carefully lift chassis out of cabinet.

TROUBLESHOOTING

A check of battery condition and total current drain of the receiver should be made first. All current measurements are made at quiescence with the receiver turned on, volume control at maximum, tuning gang closed, and with no signal conditions.

The total receiver current drain is 18 to 25 mils. This is measured by disconnecting one of the leads to the battery and inserting a milliammeter in series with the lead and battery.

If an excessive total current drain is recorded, the individual collector currents of each transistor should be checked. An excessive current reading may mean a shorted transistor; no current will indicate that a transistor or associated circuit component is defective.

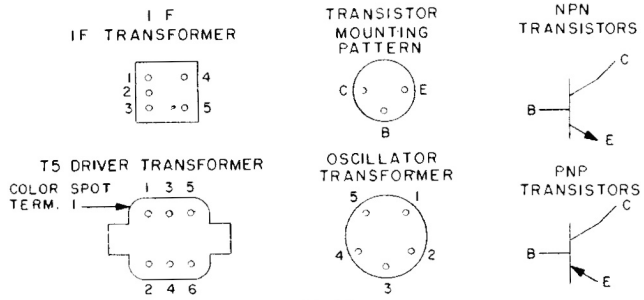

GENERAL ELECTRIC

MODEL P835A