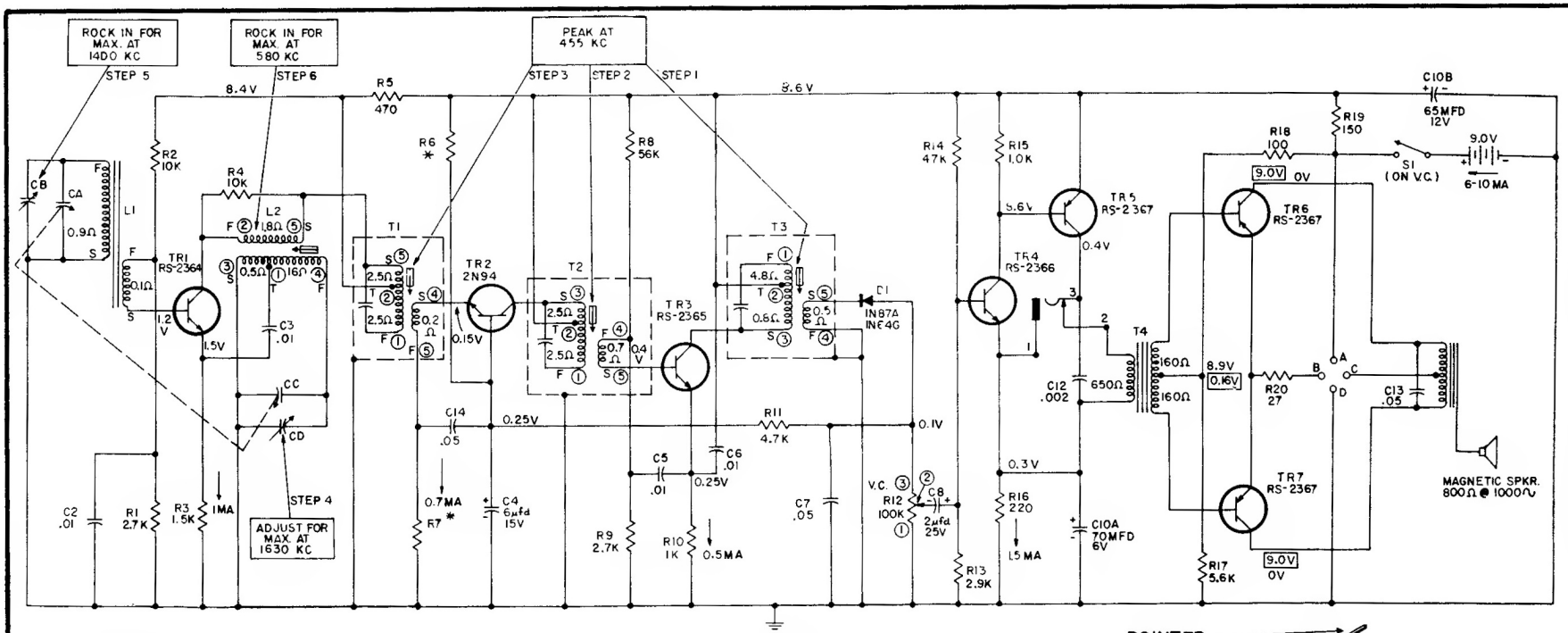


**ALIGNMENT**

SET VOLUME CONTROL AT MAXIMUM.
CONNECT OUTPUT METER OR SCOPE ACROSS VOICE COIL.
INDUCTIVELY COUPLE SIGNAL GENERATOR TO RECEIVER

NOTES

1- UNLESS OTHERWISE NOTED-
CAPACITORS MORE THAN 1= MMF
CAPACITORS LESS THAN 1= MF
RESISTORS ARE 1/2 WATT & K=1,000

2- VOLTAGE & CURRENT READINGS ARE AVERAGE UNDER NO SIGNAL CONDITIONS. VOLTAGES ARE POSITIVE WITH RESPECT TO GROUND.

3- SIMILAR APPROVED TRANSISTORS MAY BE USED.

4- VOLTAGES SHOWN IN [ ] ARE FOR NPN TRANSISTORS IN TR6 & TR7.

5- FOR PNP TRANSISTORS IN TR6 & TR7
A- JUMPER A TO B
B- JUMPER C TO D
C- R18 = 100Ω
D- R19 = 5.6KΩ

6- FOR NPN TRANSISTORS IN TR6 & TR7
A- JUMPER A TO C
B- JUMPER B TO D
C- R18 = 5.6KΩ
D- R19 = 100Ω

*7- R6 VALUES -

| TR2 | R6 | R7 |
|---|---|---|
| 2N94-132 | 82K | 220 |
| 2N94-362 | 150K | 220 |
| RS 3306 | 180K | 470 |

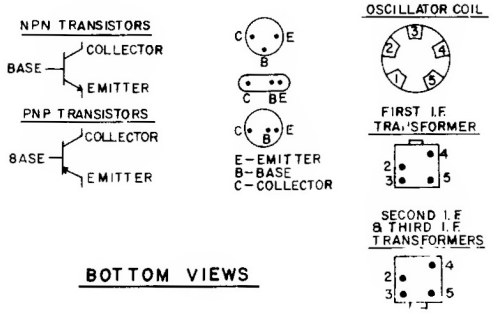


BOTTOM VIEWS

COILS AND TRANSFORMERS

| | | | |
|---|---|---|---|
| RS-2601 | T4 | Driver Transformer..... | 1.60 |
| RS-2602 | T1 | 1st I.F..... | 2.10 |
| RS-2603 | T2 | 2nd I.F..... | 2.10 |
| RS-2604 | T3 | 3rd I.F..... | 2.10 |
| RS-2605 | L2 | Oscillator Coil..... | 1.10 |
| RS-2607 | L1 | Antenna..... | 1.90 |

113/4" LOOP TO LOOP
OVERALL LENGTH 14"

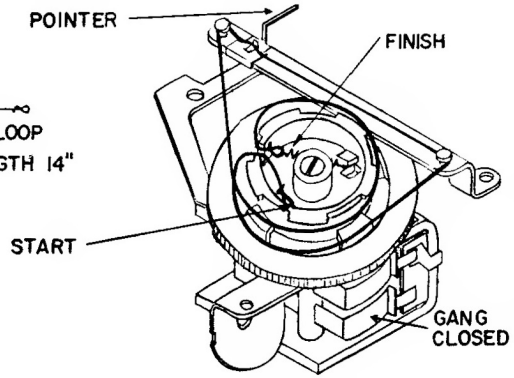


DIAL STRINGING

GENERAL ELECTRIC

MODELS P9001A P9011A