GENERAL ELECTRIC

Models P910AA, P911AA, P914AA, P945B, P950A, P960A, P995A, P996A

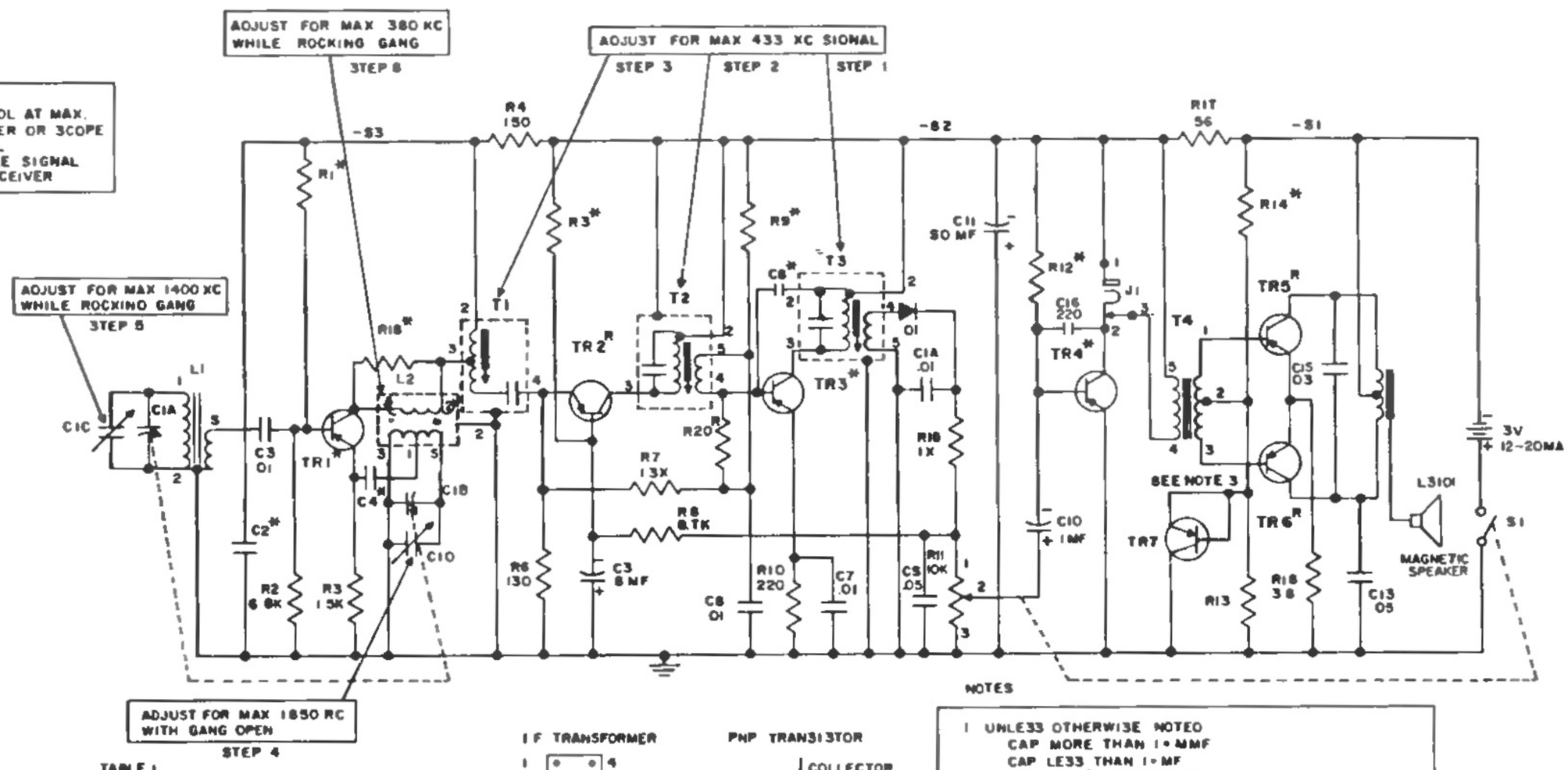

TABLE 1

TABLE OF TRANSISTOR VOLTAGES				
	EMITTER	BASE	COLLECTOR	FUNCTION
TR1	6	.65	2 S	OSC MIXER
TR2	19 TO .28	34 TO 4	2 6	1st I F AMP
TR3	.18 TO .3	33 TO 43	2 6	2nd I F AMP
TR4	0	2	2 6	AUDIO DRIVER
TR5	.04	2	3	PUSH PULL
TR6	.04	.2	3	AUDIO OUTPUT
TR7	0	15 TO .2	.15 TO .2	BIAS REG

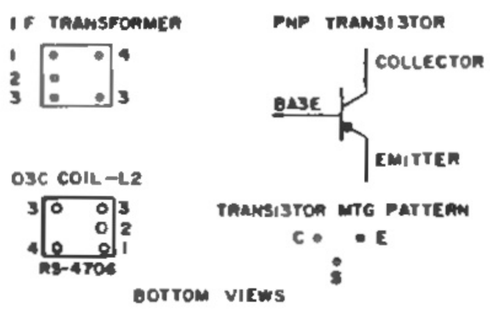

NOTES

1. UNLESS OTHERWISE NOTED
   CAP MORE THAN 1 MMF
   CAP LESS THAN 1 MF
   RES ARE 1/2 WATT X 1000
2. VOLTAGES ARE NEGATIVE WITH RESPECT TO GRD UNDER NO SIGNAL CONDITIONS & VOL CONTROL MIN
3. REPLACE TRANSISTORS WITH TYPES SHOWN IN TABLE 2
4. * SEE COMPONENT SUBSTITUTION CHART
5. TR7 (USE ONLY RS3504), R14 = 27X 1/2 WATT, R13 = 220Ω 1/4 WATT, THIS BIAS REGULATOR IS USED IN P880 AND NOT IN P810

TROUBLESHOOTING

A check of battery condition and total current drain of the receiver should be made first. All current measurements are made at quiescence with the receiver turned on, volume control at minimum, tuning gang closed, and with no-signal conditions.

The total quiescent receiver current drain is 12 to 20 mils. This is measured by inserting a milliammeter in series with the batteries.

CHASSIS REMOVAL

1. Remove the dial knob screw with a small Phillips screw driver and lift off the dial knob.
2. Remove cabinet back by inserting a coin in the slot on the bottom of the set, giving it a slight twist.
3. Remove two 1/8" Phillips-head screws located underneath the batteries.
4. Remove 1/8" Phillips-head screw located next to the tuning capacitor.
5. Slide out the circuit board in the direction of the cabinet bottom and lift out.

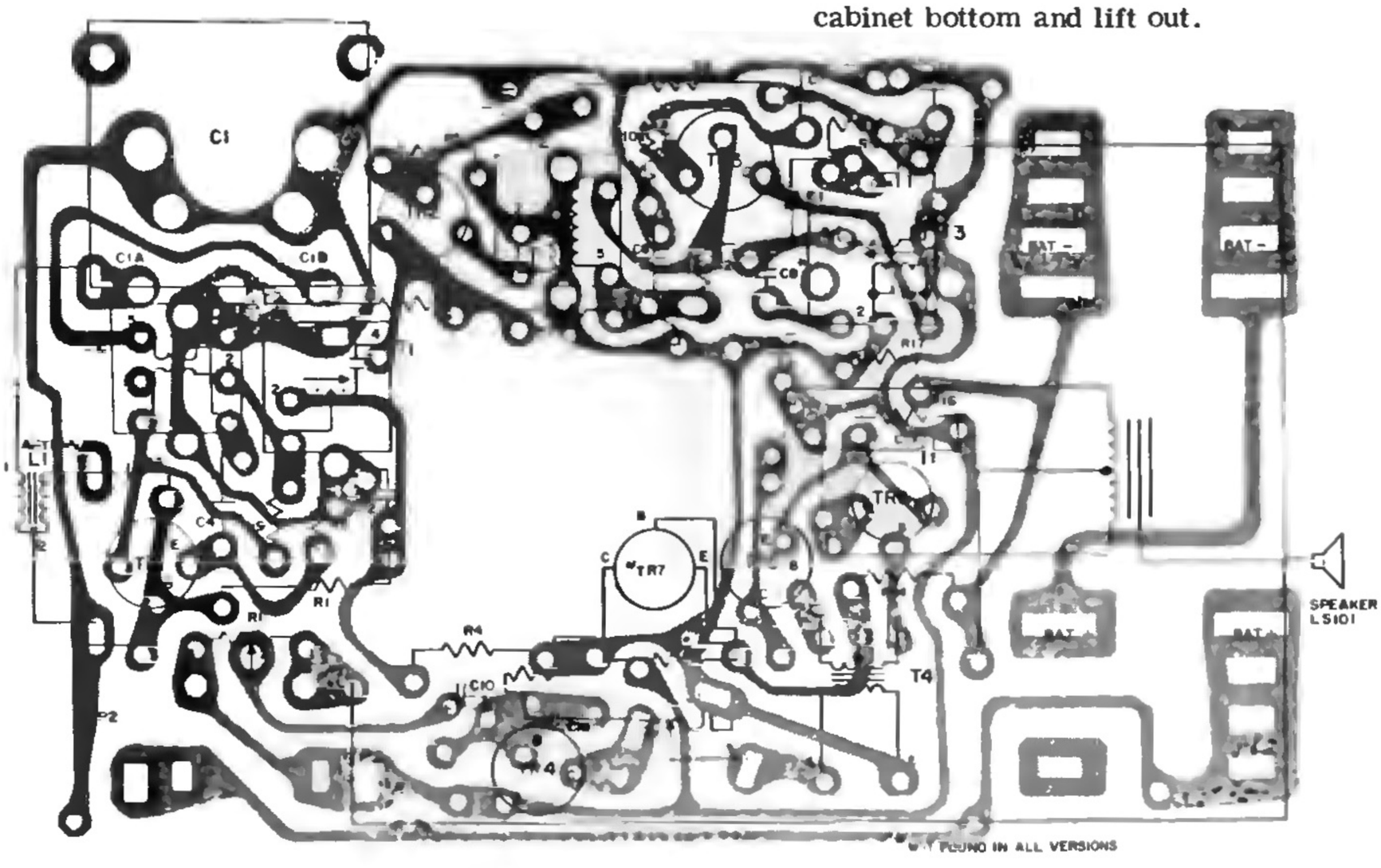

* FOUND IN ALL VERSIONS

GENERAL ELECTRIC

Models P910AA, P911AA, P914AA, P945B, P950A, P960A, P995A, P996A

TABLE 2, COMPONENT SUBSTITUTION CHART

The following components may vary in different group versions of this model. Use it to determine the necessary changes required when substituting another component for the original one. When substituting from one group, all items listed as being in the new group must be used.

GROUP	TR1	TR2	TR3	TR4	TR5,6	R1	R5	R8	R9	R12	R14	R15	R19	R20	C2	C4	C8
1	RS-3868	RS-3862	RS-3863	RS-5531	RS-5734	18K	27K	8.2K	12K	100K	2.7K	220	8.2K	3.3K	.005	.005	omit
2	RS-3868	RS-3862	RS-3863	RS-5531	RS-5735	18K	27K	8.2K	12K	100K	2.7K	220	8.2K	3.3K	.005	.005	omit
3	RS-3868	RS-3862	RS-3863	RS-5531	RS-5736	18K	27K	8.2K	12K	100K	2.7K	220	8.2K	3.3K	.005	.005	omit
4	RS-3868	RS-3862	RS-3863	RS-5531	RS-5737	18K	27K	8.2K	12K	100K	2.7K	220	8.2K	3.3K	.005	.005	omit
5	RS-3868	RS-3862	RS-3863	RS-5532	RS-5734	18K	27K	8.2K	12K	120K	2.7K	220	8.2K	3.3K	.005	.005	omit
6	RS-3868	RS-3862	RS-3863	RS-5532	RS-5735	18K	27K	8.2K	12K	120K	2.7K	220	8.2K	3.3K	.005	.005	omit
7	RS-3868	RS-3862	RS-3863	RS-5532	RS-5736	18K	27K	8.2K	12K	120K	2.7K	220	8.2K	3.3K	.005	.005	omit
8	RS-3868	RS-3862	RS-3863	RS-5532	RS-5737	18K	27K	8.2K	12K	120K	2.7K	220	8.2K	3.3K	.005	.005	omit
9	RS-3868	RS-3862	RS-3863	RS-5533	RS-5731	18K	27K	8.2K	12K	180K	1.8K	150	8.2K	3.3K	.005	.005	omit
10	RS-3868	RS-3862	RS-3863	RS-5533	RS-5732	18K	27K	8.2K	12K	180K	1.8K	150	8.2K	3.3K	.005	.005	omit
11	RS-3868	RS-3862	RS-3863	RS-5533	RS-5733	18K	27K	8.2K	12K	180K	1.8K	150	8.2K	3.3K	.005	.005	omit
12	RS-3868	RS-3862	RS-3863	RS-5533	RS-5734	18K	27K	8.2K	12K	180K	2.7K	220	8.2K	3.3K	.005	.005	omit
13	RS-3868	RS-3862	RS-3863	RS-5533	RS-5735	18K	27K	8.2K	12K	180K	2.7K	220	8.2K	3.3K	.005	.005	omit
14	RS-3868	RS-3862	RS-3863	RS-5533	RS-5736	18K	27K	8.2K	12K	180K	2.7K	220	8.2K	3.3K	.005	.005	omit
15	RS-3868	RS-3862	RS-3863	RS-5533	RS-5737	18K	27K	8.2K	12K	180K	2.7K	220	8.2K	3.3K	.005	.005	omit
16	RS-3868	RS-3862	RS-3863	RS-5534	RS-5731	18K	27K	8.2K	12K	220K	1.8K	150	8.2K	3.3K	.005	.005	omit
17	RS-3868	RS-3862	RS-3863	RS-5534	RS-5732	18K	27K	8.2K	12K	220K	1.8K	150	8.2K	3.3K	.005	.005	omit
18	RS-3868	RS-3862	RS-3863	RS-5534	RS-5733	18K	27K	8.2K	12K	220K	1.8K	150	8.2K	3.3K	.005	.005	omit
19	RS-3868	RS-3862	RS-3863	RS-5535	RS-5731	18K	27K	8.2K	12K	270K	1.8K	150	8.2K	3.3K	.005	.005	omit
20	RS-3868	RS-3862	RS-3863	RS-5535	RS-5732	18K	27K	8.2K	12K	270K	1.8K	150	8.2K	3.3K	.005	.005	omit
21	RS-3868	RS-3862	RS-3863	RS-5535	RS-5733	18K	27K	8.2K	12K	270K	1.8K	150	8.2K	3.3K	.005	.005	omit
22	RS-5107	RS-5206	RS-5312	RS-5531	RS-5734	22K	47K	12K	18K	100K	2.7K	220	omit	omit	.01	.01	RS-3413
23	RS-5107	RS-5206	RS-5312	RS-5531	RS-5735	22K	47K	12K	18K	100K	2.7K	220	omit	omit	.01	.01	RS-3413
24	RS-5107	RS-5206	RS-5312	RS-5531	RS-5736	22K	47K	12K	18K	100K	2.7K	220	omit	omit	.01	.01	RS-3413
25	RS-5107	RS-5206	RS-5312	RS-5531	RS-5737	22K	47K	12K	18K	100K	2.7K	220	omit	omit	.01	.01	RS-3413
26	RS-5107	RS-5206	RS-5312	RS-5532	RS-5734	22K	47K	12K	18K	120K	2.7K	220	omit	omit	.01	.01	RS-3413
27	RS-5107	RS-5206	RS-5312	RS-5532	RS-5735	22K	47K	12K	18K	120K	2.7K	220	omit	omit	.01	.01	RS-3413
28	RS-5107	RS-5206	RS-5312	RS-5532	RS-5736	22K	47K	12K	18K	120K	2.7K	220	omit	omit	.01	.01	RS-3413
29	RS-5107	RS-5206	RS-5312	RS-5532	RS-5737	22K	47K	12K	18K	120K	2.7K	220	omit	omit	.01	.01	RS-3413
30	RS-5107	RS-5206	RS-5312	RS-5533	RS-5731	22K	47K	12K	18K	180K	1.8K	150	omit	omit	.01	.01	RS-3413
31	RS-5107	RS-5206	RS-5312	RS-5533	RS-5732	22K	47K	12K	18K	180K	1.8K	150	omit	omit	.01	.01	RS-3413
32	RS-5107	RS-5206	RS-5312	RS-5533	RS-5733	22K	47K	12K	18K	180K	1.8K	150	omit	omit	.01	.01	RS-3413
33	RS-5107	RS-5206	RS-5312	RS-5533	RS-5734	22K	47K	12K	18K	180K	2.7K	220	omit	omit	.01	.01	RS-3413
34	RS-5107	RS-5206	RS-5312	RS-5533	RS-5735	22K	47K	12K	18K	180K	2.7K	220	omit	omit	.01	.01	RS-3413
35	RS-5107	RS-5206	RS-5312	RS-5533	RS-5736	22K	47K	12K	18K	180K	2.7K	220	omit	omit	.01	.01	RS-3413
36	RS-5107	RS-5206	RS-5312	RS-5533	RS-5737	22K	47K	12K	18K	180K	2.7K	220	omit	omit	.01	.01	RS-3413
37	RS-5107	RS-5206	RS-5312	RS-5534	RS-5731	22K	47K	12K	18K	220K	1.8K	150	omit	omit	.01	.01	RS-3413
38	RS-5107	RS-5206	RS-5312	RS-5534	RS-5732	22K	47K	12K	18K	220K	1.8K	150	omit	omit	.01	.01	RS-3413
39	RS-5107	RS-5206	RS-5312	RS-5534	RS-5733	22K	47K	12K	18K	220K	1.8K	150	omit	omit	.01	.01	RS-3413
40	RS-5107	RS-5206	RS-5312	RS-5535	RS-5731	22K	47K	12K	18K	270K	1.8K	150	omit	omit	.01	.01	RS-3413
41	RS-5107	RS-5206	RS-5312	RS-5535	RS-5732	22K	47K	12K	18K	270K	1.8K	150	omit	omit	.01	.01	RS-3413
42	RS-5107	RS-5206	RS-5312	RS-5535	RS-5733	22K	47K	12K	18K	270K	1.8K	150	omit	omit	.01	.01	RS-3413
43																	
44																	
45	RS-5109	RS-5206	RS-5312	RS-5535	RS-5733	18K	47K	12K	18K	270K	1.8K	220	omit	omit	.01	.005	RS-3413
46	RS-5109	RS-5206	RS-5312	RS-5531	RS-5734	18K	47K	12K	18K	100K	2.7K	220	omit	omit	.01	.005	RS-3413
47	RS-5109	RS-5206	RS-5312	RS-5531	RS-5735	18K	47K	12K	18K	100K	2.7K	220	omit	omit	.01	.005	RS-3413
48	RS-5109	RS-5206	RS-5312	RS-5531	RS-5736	18K	47K	12K	18K	100K	2.7K	220	omit	omit	.01	.005	RS-3413
49	RS-5109	RS-5206	RS-5312	RS-5531	RS-5737	18K	47K	12K	18K	100K	2.7K	220	omit	omit	.01	.005	RS-3413
50	RS-5109	RS-5206	RS-5312	RS-5532	RS-5734	18K	47K	12K	18K	120K	2.7K	220	omit	omit	.01	.005	RS-3413
51	RS-5109	RS-5206	RS-5312	RS-5532	RS-5735	18K	47K	12K	18K	120K	2.7K	220	omit	omit	.01	.005	RS-3413
52	RS-5109	RS-5206	RS-5312	RS-5532	RS-5736	18K	47K	12K	18K	120K	2.7K	220	omit	omit	.01	.005	RS-3413
53	RS-5109	RS-5206	RS-5312	RS-5532	RS-5737	18K	47K	12K	18K	120K	2.7K	220	omit	omit	.01	.005	RS-3413
54	RS-5109	RS-5206	RS-5312	RS-5533	RS-5731	18K	47K	12K	18K	180K	1.8K	150	omit	omit	.01	.005	RS-3413
55	RS-5109	RS-5206	RS-5312	RS-5533	RS-5732	18K	47K	12K	18K	180K	1.8K	150	omit	omit	.01	.005	RS-3413
56	RS-5109	RS-5206	RS-5312	RS-5533	RS-5733	18K	47K	12K	18K	180K	1.8K	150	omit	omit	.01	.005	RS-3413
57	RS-5109	RS-5206	RS-5312	RS-5533	RS-5734	18K	47K	12K	18K	180K	2.7K	220	omit	omit	.01	.005	RS-3413
58	RS-5109	RS-5206	RS-5312	RS-5533	RS-5735	18K	47K	12K	18K	180K	2.7K	220	omit	omit	.01	.005	RS-3413
59	RS-5109	RS-5206	RS-5312	RS-5533	RS-5736	18K	47K	12K	18K	180K	2.7K	220	omit	omit	.01	.005	RS-3413
60	RS-5109	RS-5206	RS-5312	RS-5533	RS-5737	18K	47K	12K	18K	180K	2.7K	220	omit	omit	.01	.005	RS-3413
61	RS-5109	RS-5206	RS-5312	RS-5534	RS-5731	18K	47K	12K	18K	220K	1.8K	150	omit	omit	.01	.005	RS-3413
62	RS-5109	RS-5206	RS-5312	RS-5534	RS-5732	18K	47K	12K	18K	220K	1.8K	150	omit	omit	.01	.005	RS-3413
63	RS-5109	RS-5206	RS-5312	RS-5534	RS-5733	18K	47K	12K	18K	220K	1.8K	150	omit	omit	.01	.005	RS-3413
64	RS-5109	RS-5206	RS-5312	RS-5535	RS-5731	18K	47K	12K	18K	270K	1.8K	150	omit	omit	.01	.005	RS-3413
65	RS-5109	RS-5206	RS-5312	RS-5535	RS-5732	18K	47K	12K	18K	270K	1.8K	150	omit	omit	.01	.005	RS-3413
66	RS-5109	RS-5206	RS-5312	RS-5535	RS-5733	18K	47K	12K	18K	270K	1.8K	150	omit	omit	.01	.005	RS-3413