GENERAL ELECTRIC

RC1680A
RC1690A, AR, B, & BR
RC1691A, AR, B, & BR
RC1692A, AR, B, & BR
RC1694A, AR, B, & BR

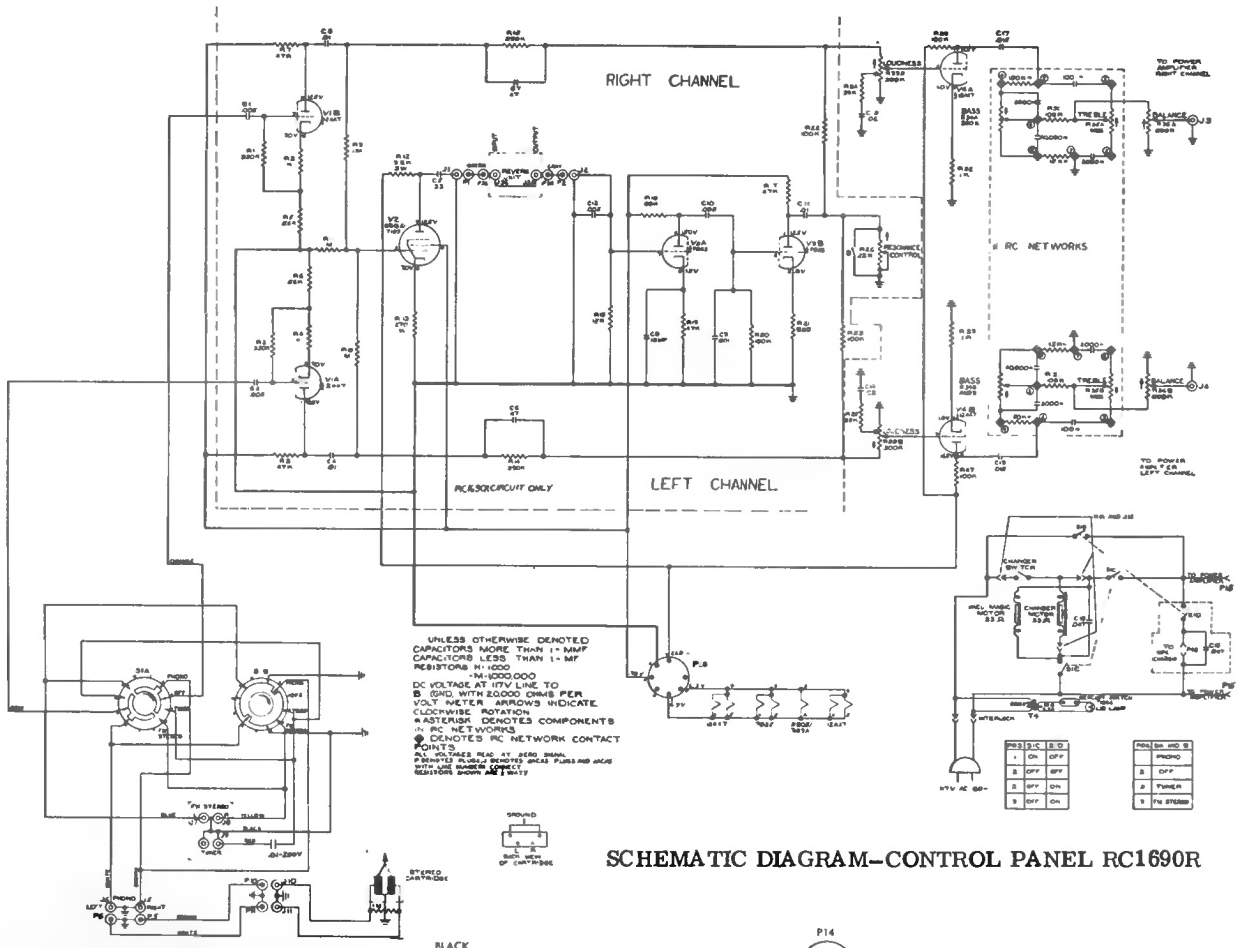

SCHEMATIC DIAGRAM—CONTROL PANEL RC1690R

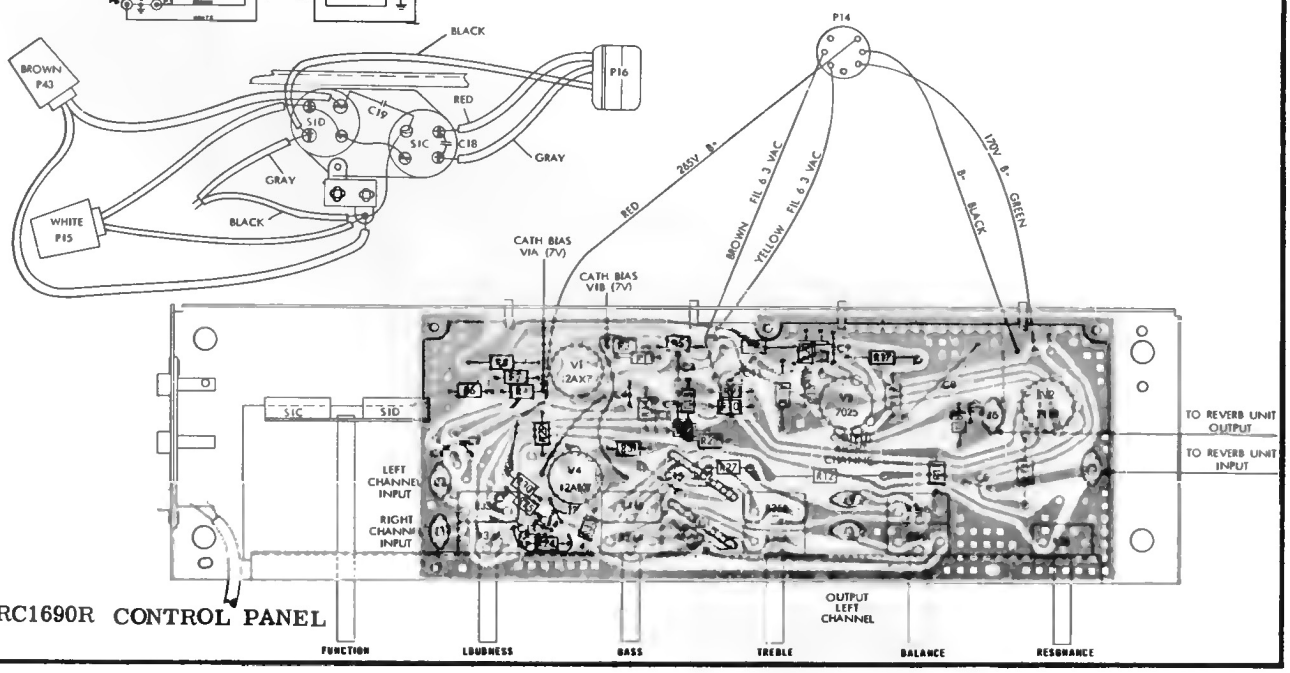

RC1690R CONTROL PANEL

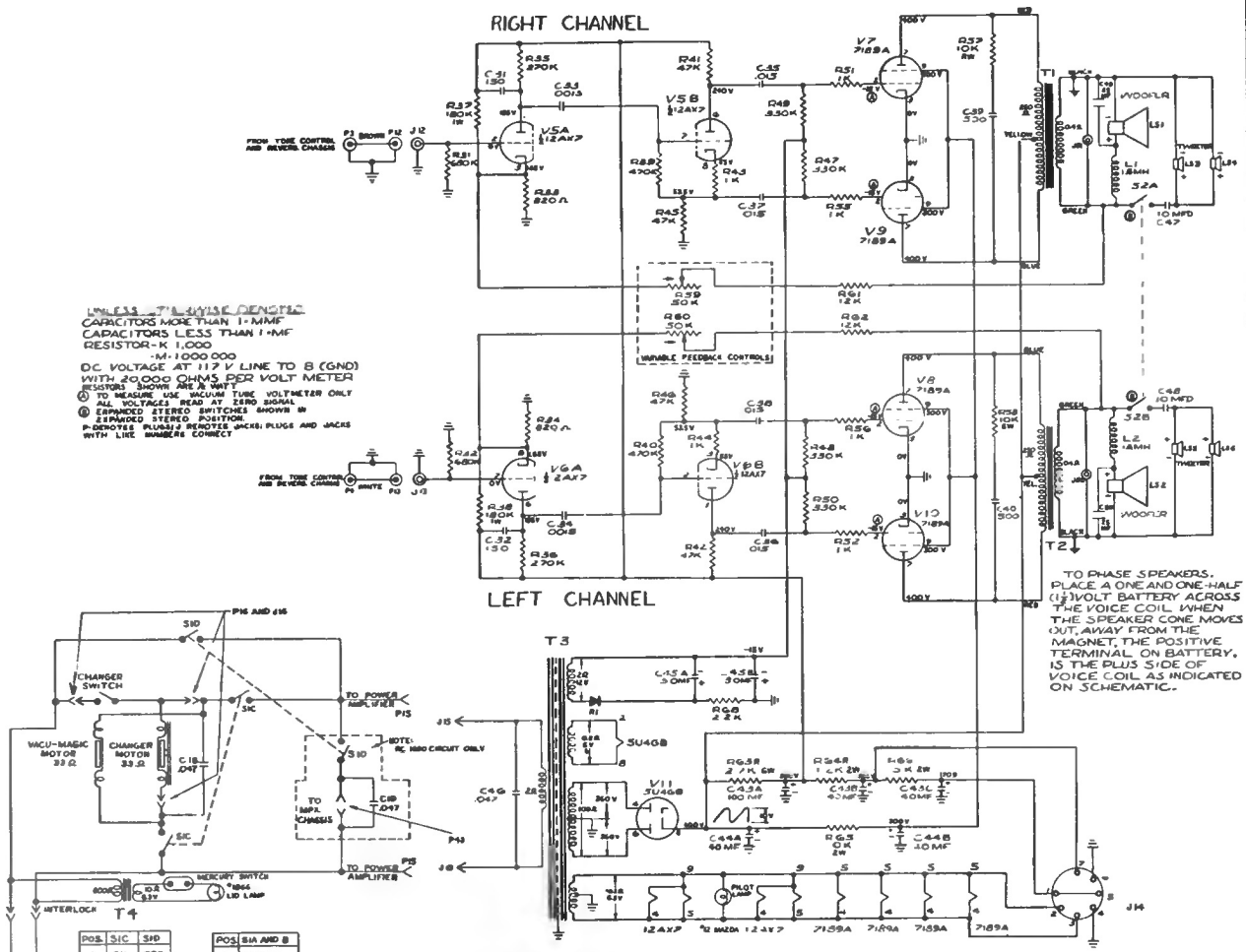

POS.	S1C	S1D
1	ON	OFF
2	OFF	OFF
3	OFF	ON
4	OFF	ON

POS.	S1A AND B
1	PHONO
2	OFF
3	TUNER
4	TAPE

DIAGRAM—POWER AMPLIFIER RC1680-90
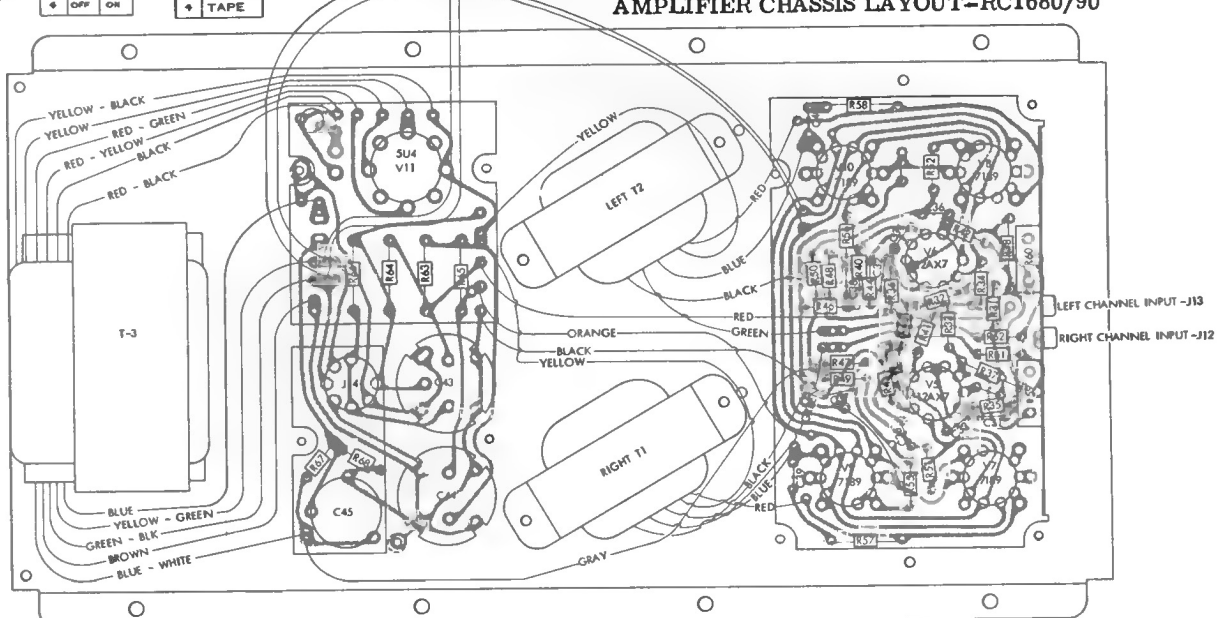
AMPLIFIER CHASSIS LAYOUT—RC1680/90