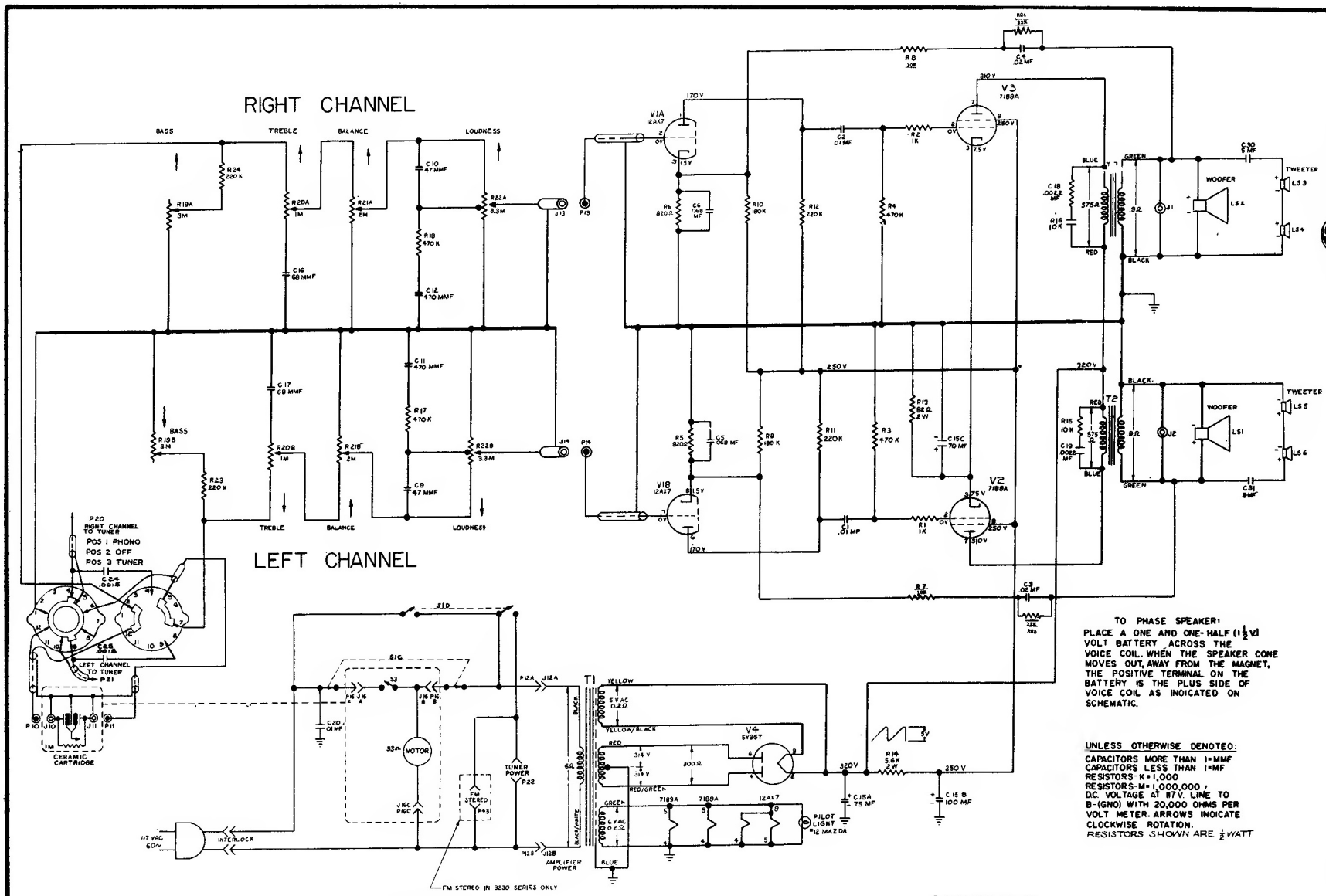

TO PHASE SPEAKER: PLACE A ONE AND ONE-HALF ($1\frac{1}{2}$V) VOLT BATTERY ACROSS THE VOICE COIL. WHEN THE SPEAKER CONE MOVES OUT, AWAY FROM THE MAGNET, THE POSITIVE TERMINAL ON THE BATTERY IS THE PLUS SIDE OF VOICE COIL AS INDICATED ON SCHEMATIC.

UNLESS OTHERWISE DENOTED:
CAPACITORS MORE THAN 1=MMF
CAPACITORS LESS THAN 1=MF
RESISTORS-K=1,000
RESISTORS-M=1,000,000,
D.C. VOLTAGE AT 117V. LINE TO B-(GND) WITH 20,000 OHMS PER VOLT METER. ARROWS INDICATE CLOCKWISE ROTATION.
RESISTORS SHOWN ARE $\frac{1}{2}$ WATT

GENERAL ELECTRIC

RC3200, RC3210, RC3230 SCHEMATIC DIAGRAM

GENERAL ELECTRIC

MODELS

RC3200, RC3210, RC3230
RC3201, RC3211, RC3231
RC3202, RC3212, RC3232
RC3205, RC3215, RC3235