GENERAL ELECTRIC RP1560, RP1561, RP1570, RP2050A, RP2051A

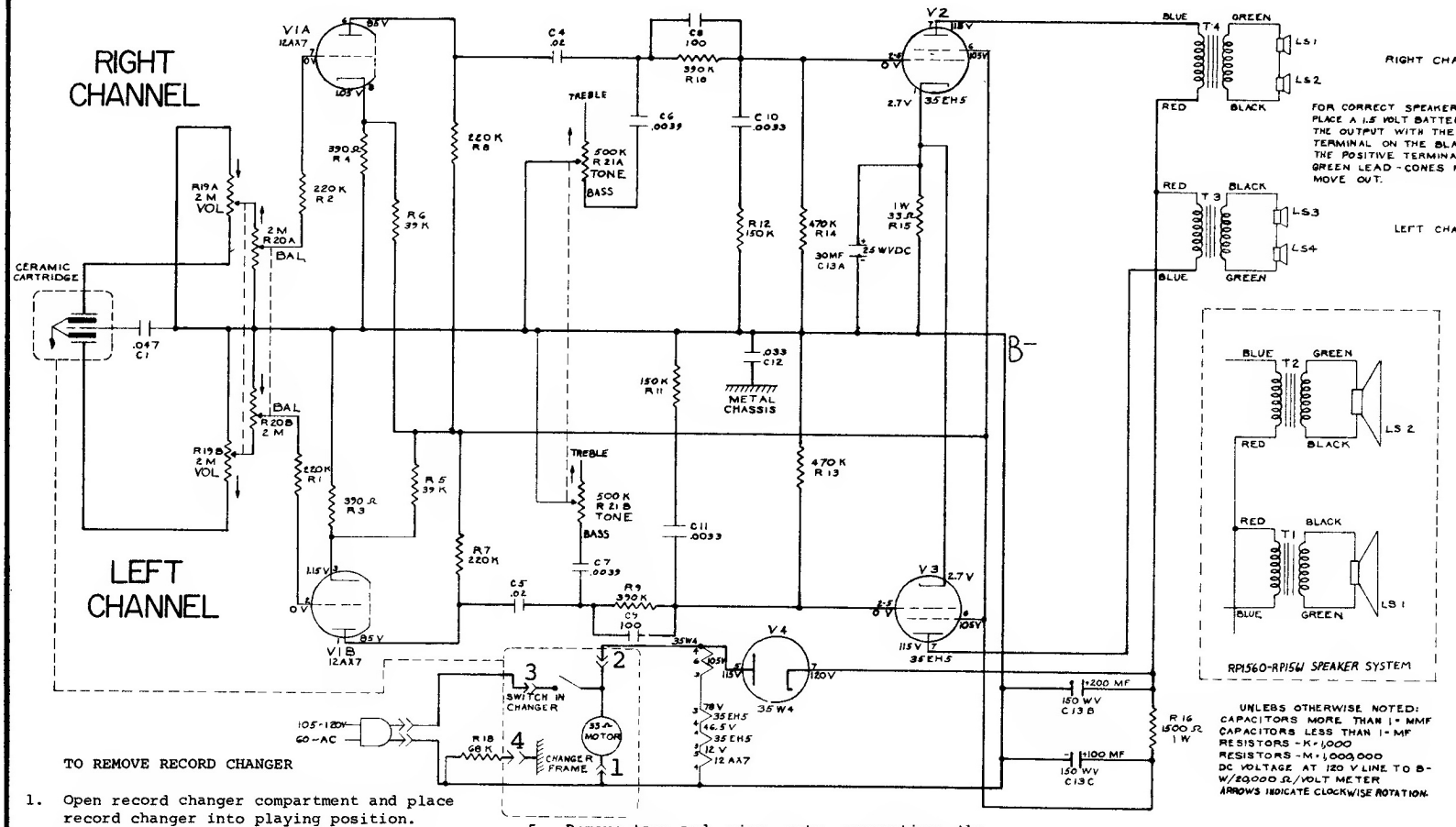

TO REMOVE RECORD CHANGER

1. Open record changer compartment and place record changer into playing position.
2. Remove two (2) screws from the back cover and remove back cover.
3. Place the shipping screw clips to a vertical position.
4. Lift the record changer and tilt upwards until the plastic power plug and signal plugs are accessable. Remove plugs from record changer.
5. Remove record changer from compartment.

TO REMOVE AMPLIFIER

1. Follow Steps 1 through 4 as described under "TO REMOVE RECORD CHANGER".
2. Remove knobs from control panel.
3. Free all wires from the metal lead dresser tabs.
4. Slide the AC power receptacle from the bracket.
5. Remove tape and wire nuts connecting the speaker leads. Be sure to label speaker leads to assure proper phasing when reassembling.
6. Remove screw holding electrolytic.
7. Remove three (3) nuts holding amplifier to cabinet and remove amplifier.

TO REMOVE SPEAKER

1. Unclasp speaker wing clamp and swing out speaker enclosure.
2. Lift wing enclosure off hinges and place grille front on a soft cloth.
3. Remove six (6) screws from speaker enclosure back and remove back.
4. Unsolder and label speaker leads to assure proper phasing when reassembling.
5. Remove nuts holding speaker to grille and remove speaker.

CARTRIDGE:	Sonotone 16T-S With Stylus - RP1560, RP1561, Cat. No. RS3476
	Sonotone 16T-SD With Stylus - RP1570 - Early Production Cat. No. RS3478
	G. E. C-100 Without Stylus - RP1560, RP1570 Series - Late Production Cat. No. RS3824
STYLUS:	Sonotone 16T-S, RP1560, RP1561 Cat. No. RS3477 - Early Production
	Sonotone 16T-SD, RP1570 - Early Production Cat. No. RS3479
	G. E. C-100 Stylus - Sapphire/Diamond RP1570-Late Production Cat. No. RS3825
	G. E. C-100 Stylus - Sapphire/Sapphire RP1560, RP1561 - Late Production Cat. No. RS4154