GENERAL ELECTRIC COMPANY

MODELS
RT1230A
RT1231A

Printed panel used is similar to the one in AS15A, see next page.

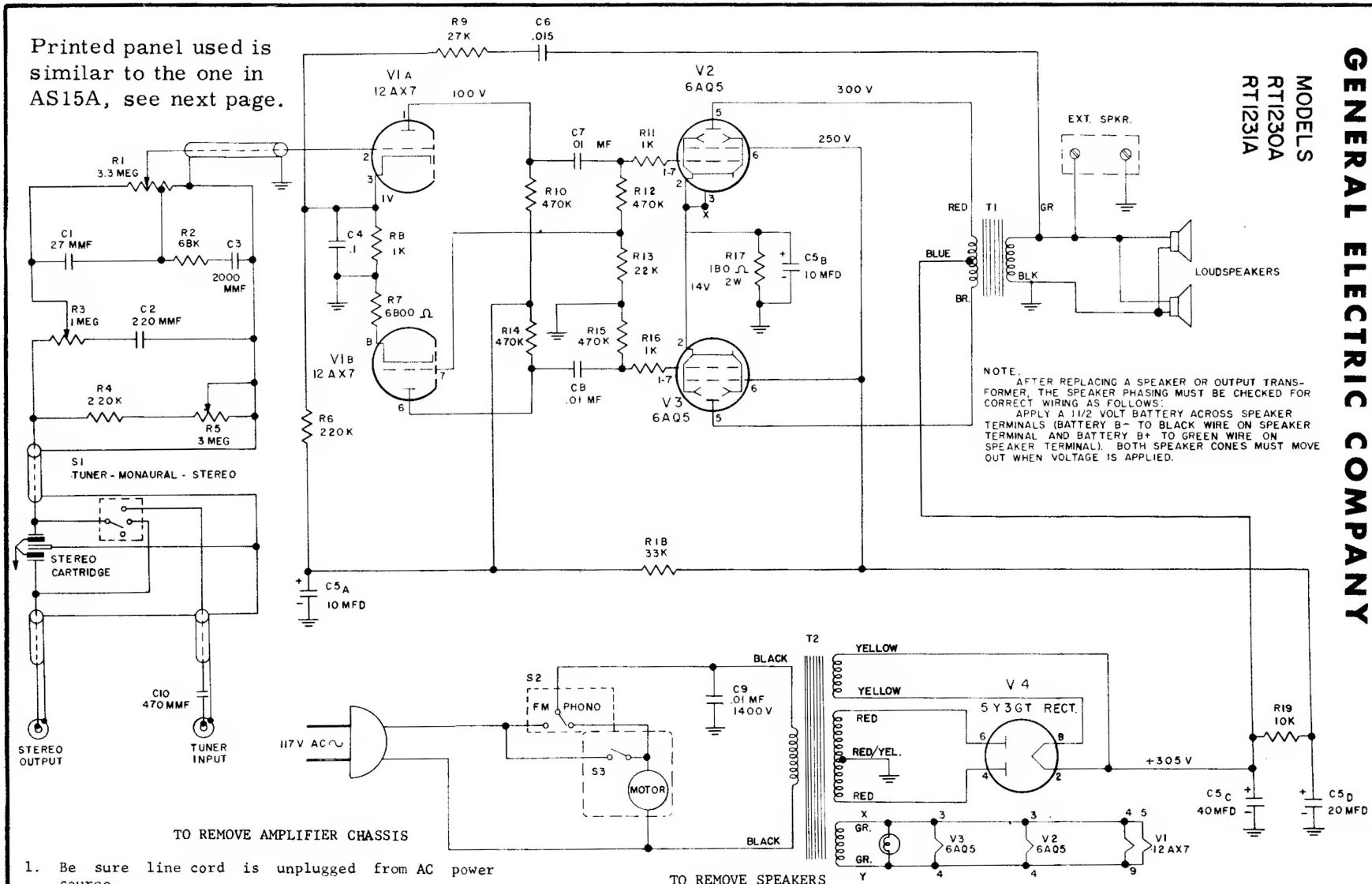

TO REMOVE AMPLIFIER CHASSIS

1. Be sure line cord is unplugged from AC power source.
2. Remove cabinet bottom.
3. Remove the 5Y3 tube from tube socket.
4. Remove the two hex head screws holding chassis to cabinet brace.
5. Remove clamps holding power cord and wires.
6. Carefully lift chassis up, tilt and slide out.
7. Remove circuit board by removing screws holding circuit board to chassis.

TO REMOVE SPEAKERS

1. Be sure line cord is unplugged from AC power source.
2. Remove cabinet bottom.
3. Remove two screws under speakers that hold grille to cabinet.
4. Pull grille with speakers attached straight out through cabinet bottom. Keep grille flush with cabinet front when pulling out.

UNLESS OTHERWISE DENOTED

CAPACITORS MORE THAN 1 = mmf
CAPACITORS LESS THAN 1 = mf
RESISTORS – K = 1,000
– M = 1,000,000
DC VOLTAGES AT 117V LINE TO B–.
W/20,000 Ω/VOLT METER

GENERAL ELECTRIC

Models AS15A and AS16A

SPECIFICATIONS

CABINET:	AS15A - Mahogany AS16A - Blond Oak
ELECTRICAL RATING:	105-120 volts 60 cycles AC 75 watts
POWER OUTPUT:	Maximum 10 watts 10% Distortion 8 watts

TO REMOVE CHASSIS FROM CABINET
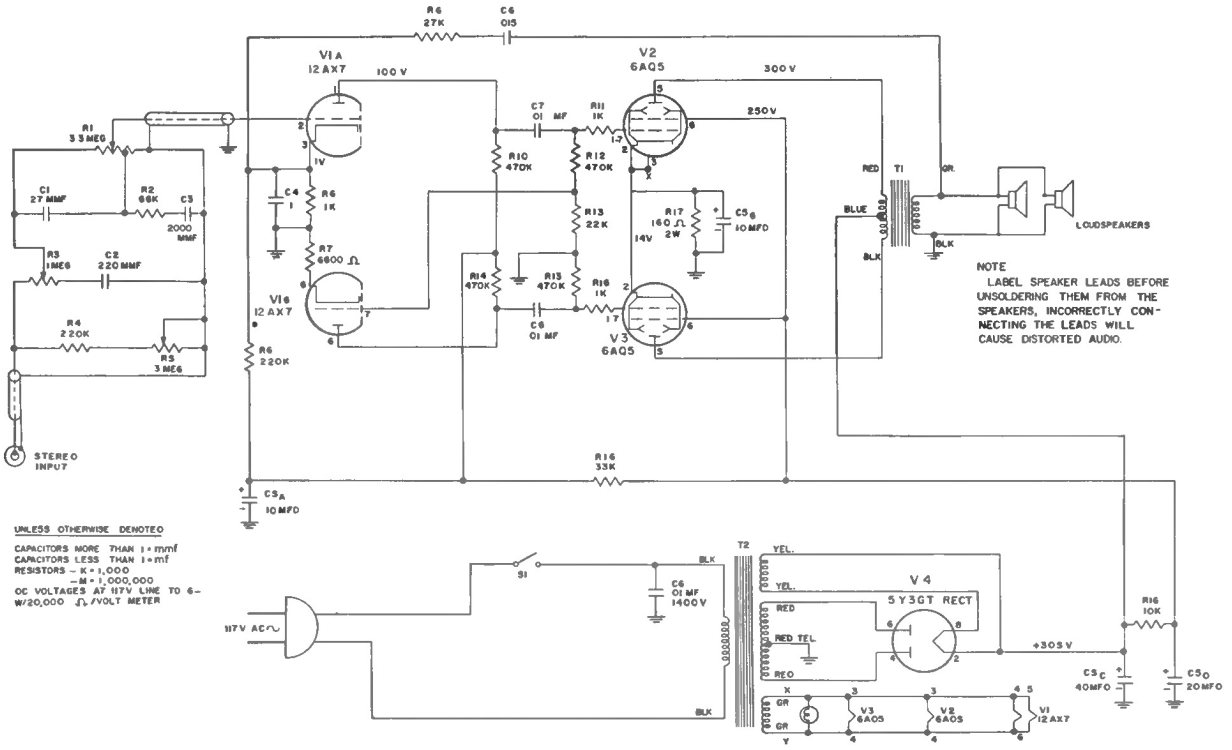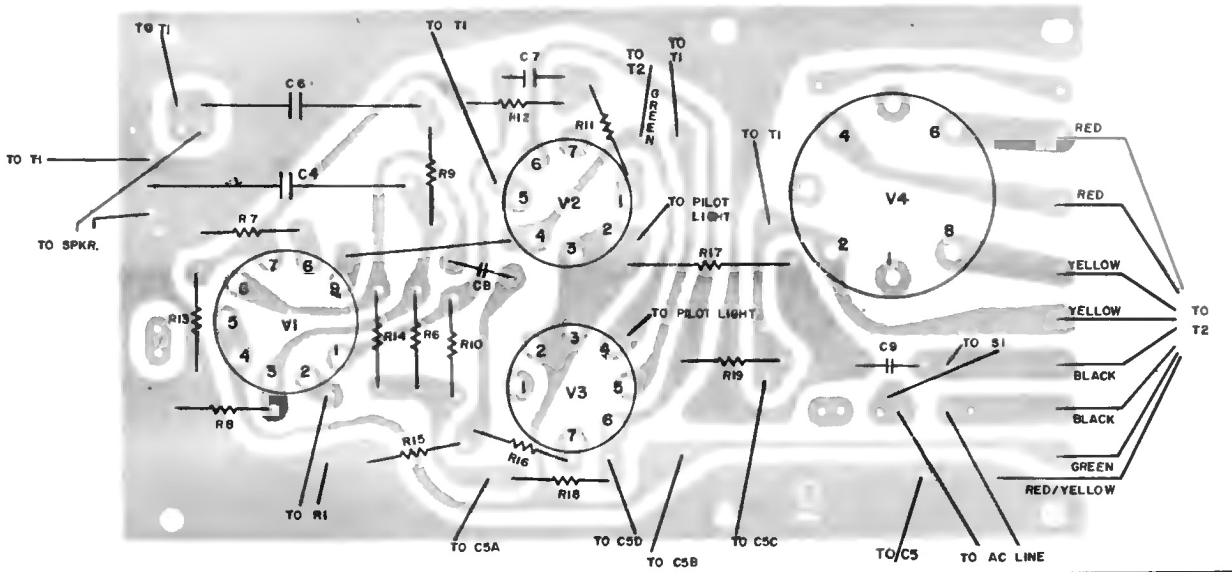
1. Remove cabinet back.
2. Remove two screws holding chassis to cabinet.
3. Unscrew clamps holding connecting wires and remove screws holding electrolytic condenser and output transformer.
4. Pull pilot light holder off bracket.
5. Remove Chassis.