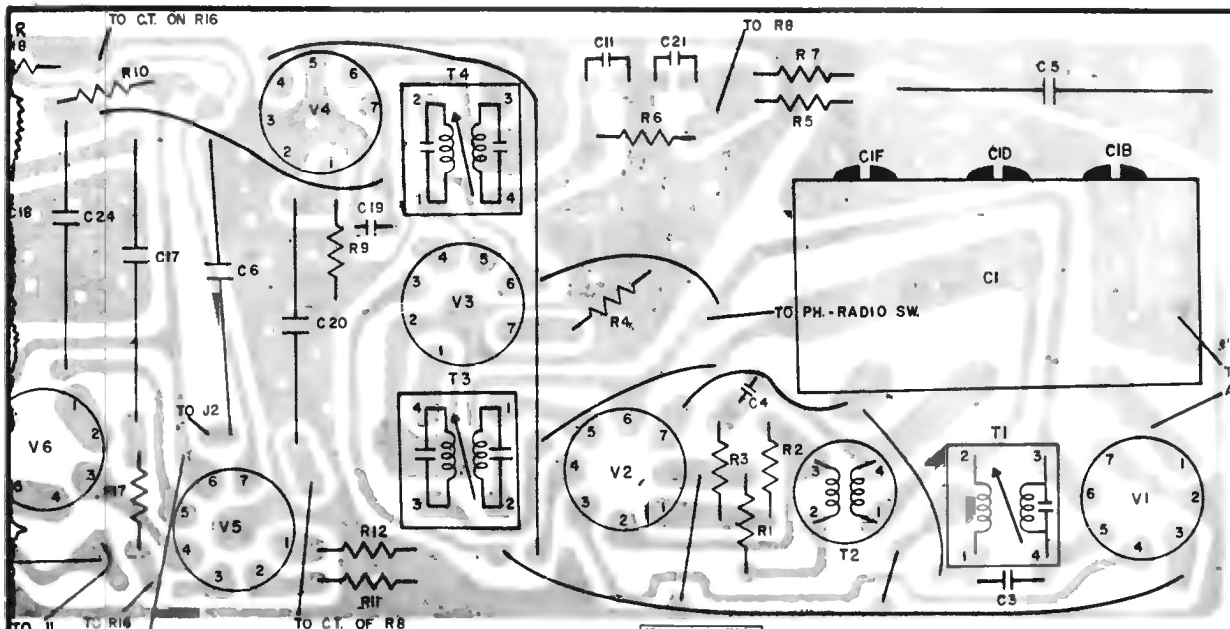

COMPONENT WIRING DIAGRAM

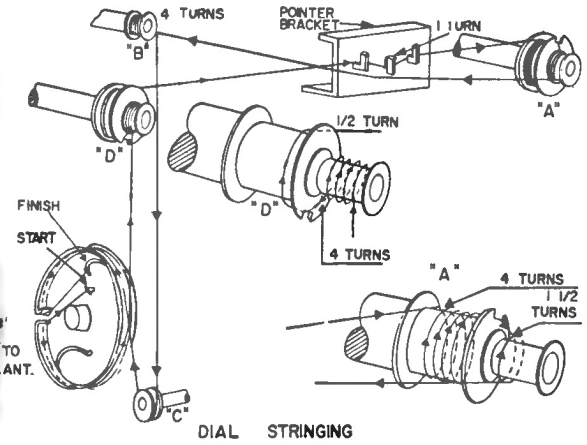

DIAL STRINGING

BEFORE STARTING THE STRINGING OPERATION, THE POINTER SHOULD BE MOVED TO EXTREME RIGHT WITH TUNING GANG IN A CLOSED POSITION. THE NOTCHES IN WINDLASSES MUST BE IN APPROXIMATE POSITIONS AS INDICATED BY "A" AND "D."

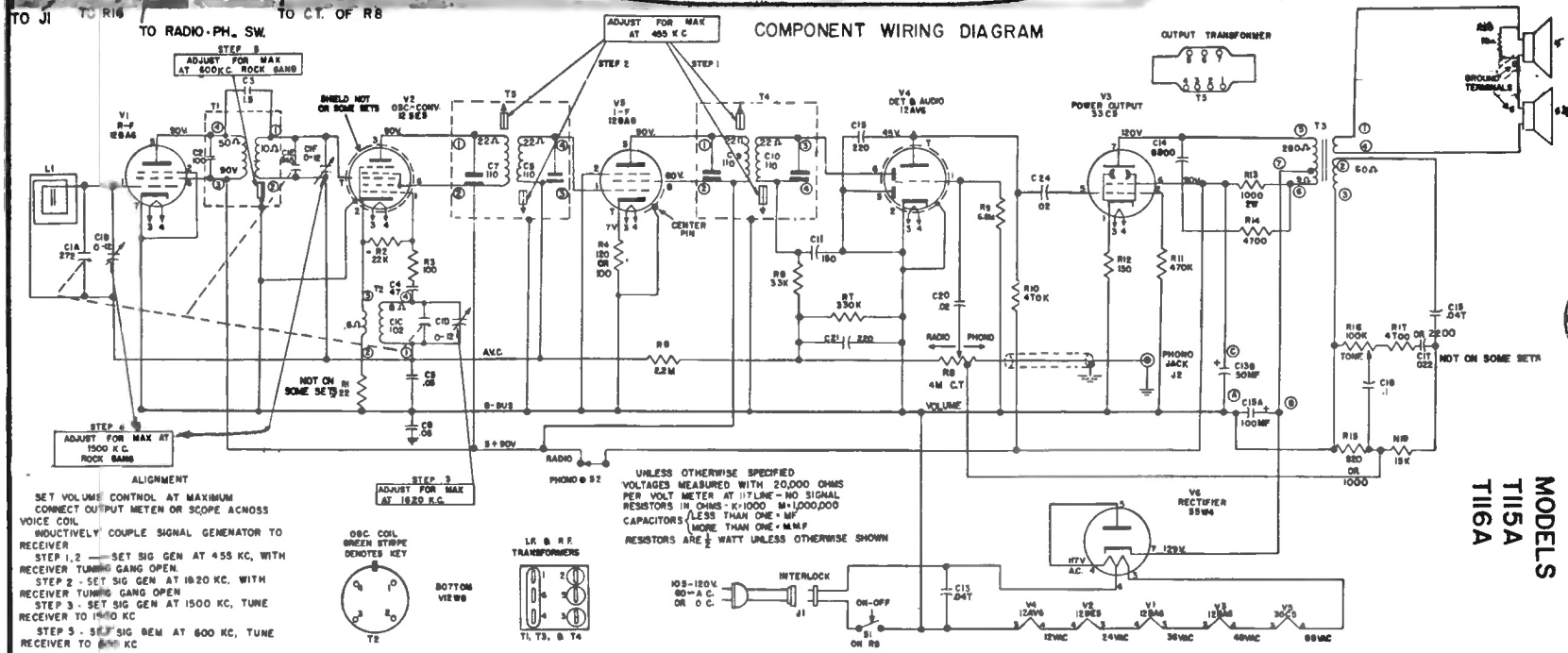

ALIGNMENT

SET VOLUME CONTROL AT MAXIMUM
CONNECT OUTPUT METER OR SCOPE ACROSS VOICE COIL
INDUCTIVELY COUPLE SIGNAL GENERATOR TO RECEIVER
STEP 1,2 — SET SIG GEN AT 455 KC, WITH RECEIVER TUNING GANG OPEN.
STEP 2 - SET SIG GEN AT 1820 KC. WITH RECEIVER TUNING GANG OPEN
STEP 3 - SET SIG GEN AT 1500 KC, TUNE RECEIVER TO 1500 KC
STEP 3 - SET SIG GEN AT 600 KC, TUNE RECEIVER TO 600 KC

UNLESS OTHERWISE SPECIFIED
VOLTAGES MEASURED WITH 20,000 OHMS PER VOLT METER AT 117 LINE - NO SIGNAL
RESISTORS IN OHMS - K=1000 M=1,000,000
CAPACITORS { LESS THAN ONE - MF / MORE THAN ONE - MMF
RESISTORS ARE ½ WATT UNLESS OTHERWISE SHOWN

GENERAL ELECTRIC

MODELS
T115A
T116A