GENERAL ELECTRIC COMPANY

Models T125A, T126A, T127A

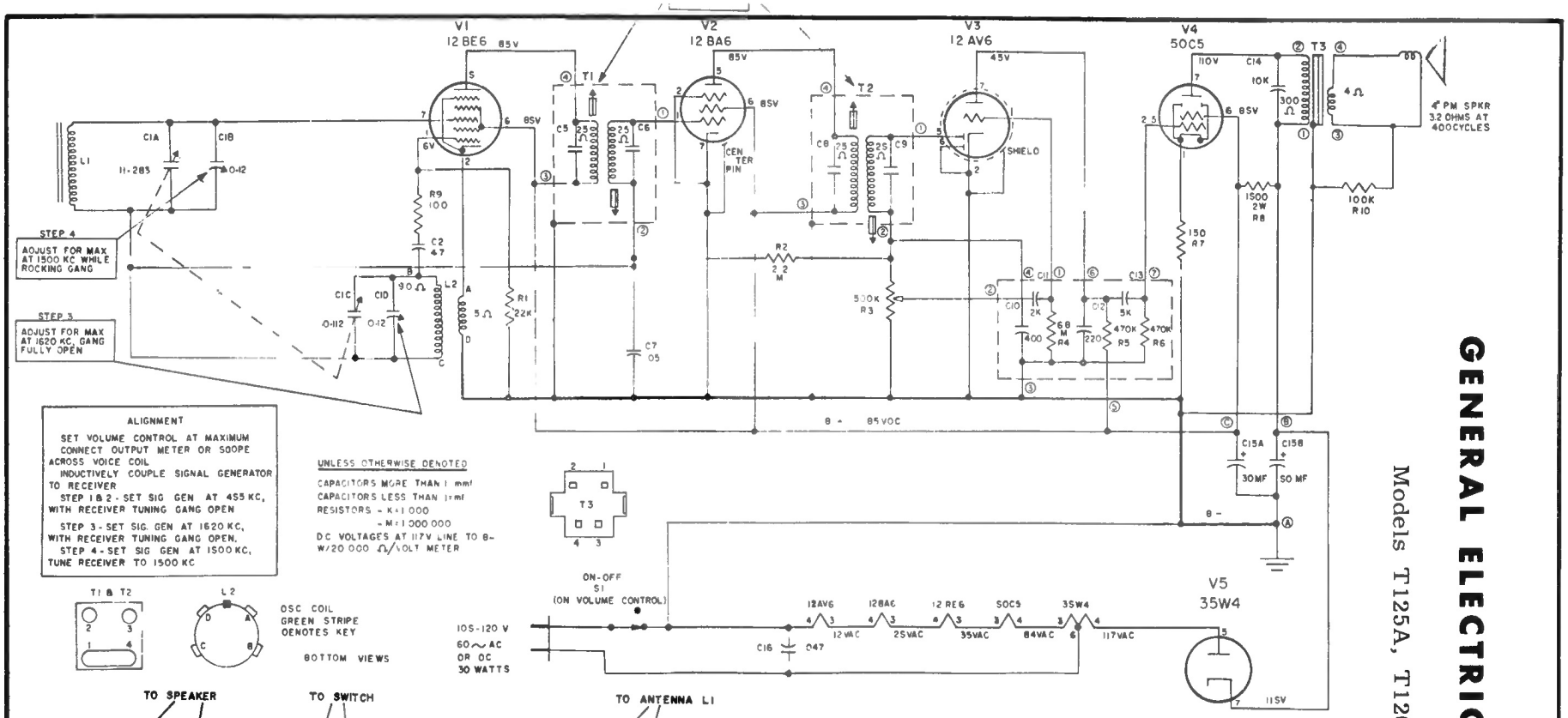

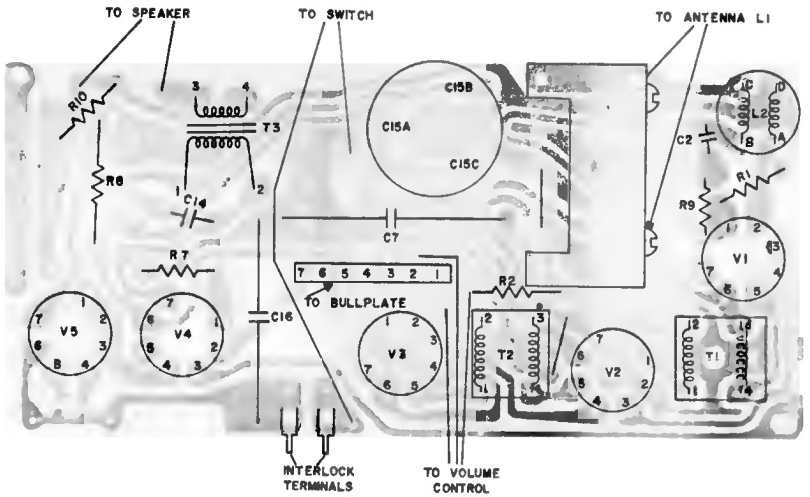

TO REMOVE CHASSIS FROM CABINET:

After removing cabinet back remove the screw on the cabinet bottom that holds the chassis board support. The tuning knob is a captive knob and remains in the cabinet front. Close the tuning gang to prevent any possible damage to the plates. Slide one hand under the printed chassis board placing the fingers over the front edge. Slide the board back out of the grooves on either end simultaneously removing the tuning gang shaft from the tuning knob.

When replacing the chassis, close the tuning gang and line the flat side of the tuning gang shaft up with the flat in the tuning knob. Place the ends of the board in the grooves and push on the edge of the board, not on the components. The tuning shaft will enter the tuning knob and the front edge of the board will seat itself in the grooved bosses inside the cabinet front. Replace the board support and self-tapping screw.