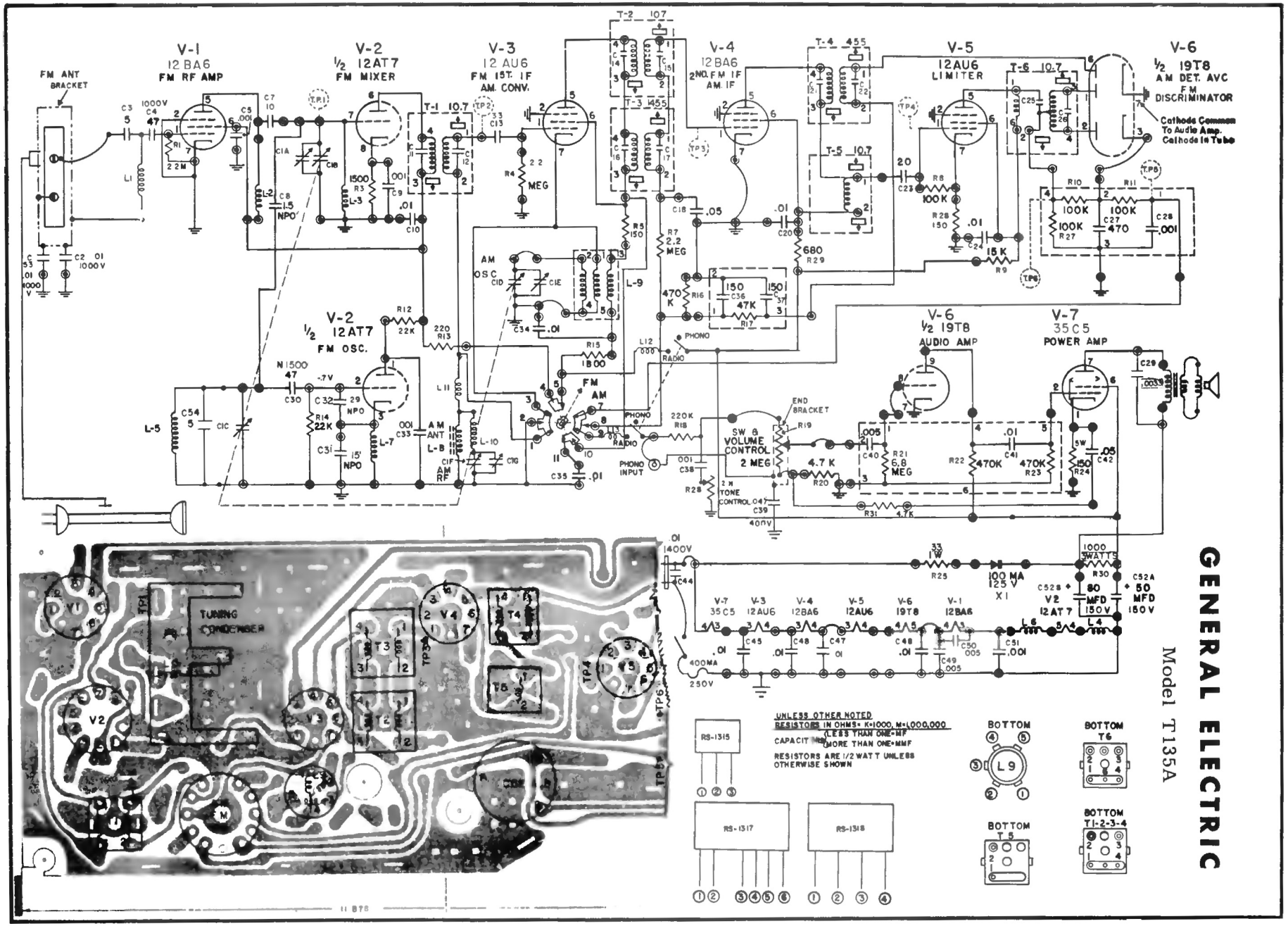
GENERAL ELECTRIC
Model T135A
V-1
12 BA6
FM RF AMP
V-2
½ 12AT7
FM MIXER
V-3
12 AU6
FM 1ST. IF
AM. CONV.
V-4
12BA6
2ND. FM IF
AM. IF
V-5
12AU6
LIMITER
V-6
½ 19T8
AM DET. AVC
FM
DISCRIMINATOR
Cathode Common To Audio Amp. Cathode In Tube
FM ANT BRACKET
V-2
½ 12AT7
FM OSC.
V-6
½ 19T8
AUDIO AMP
V-7
35C5
POWER AMP
SW & VOLUME CONTROL 2 MEG
TONE CONTROL
PHONO INPUT
PHONO
RADIO
AM OSC
AM ANT
AM RF
FM AM
TUNING CONDENSER
100 MA 125 V X1
V2 12AT7
80 MFD 150V
50 MFD 150V
1000 WATTS
UNLESS OTHER NOTED
RESISTORS IN OHMS: K=1000, M=1,000,000
CAPACITORS LESS THAN ONE=MF
MORE THAN ONE=MMF
RESISTORS ARE 1/2 WATT UNLESS OTHERWISE SHOWN
RS-1315
RS-1317
RS-1318
BOTTOM L9
BOTTOM T6
BOTTOM T5
BOTTOM T1-2-3-4