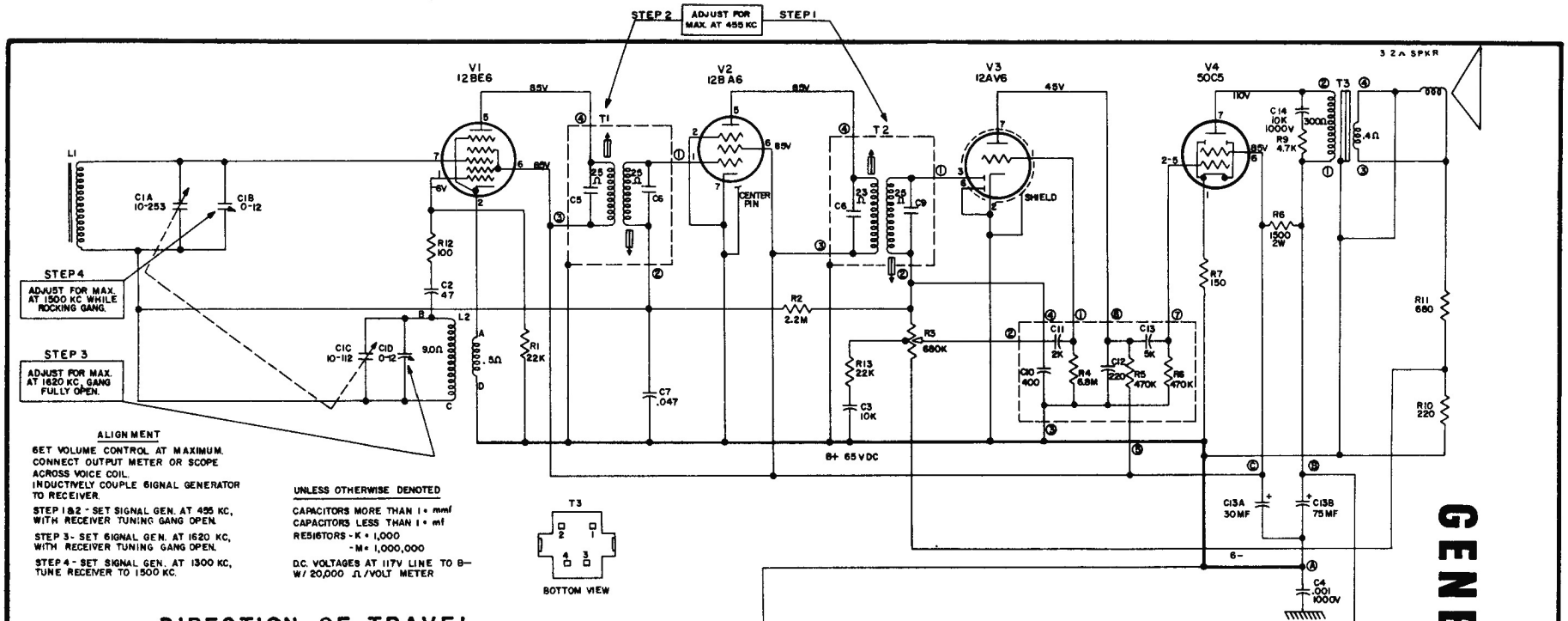

ALIGNMENT

SET VOLUME CONTROL AT MAXIMUM.
CONNECT OUTPUT METER OR SCOPE ACROSS VOICE COIL.
INDUCTIVELY COUPLE SIGNAL GENERATOR TO RECEIVER.

STEP 1 & 2 - SET SIGNAL GEN. AT 455 KC, WITH RECEIVER TUNING GANG OPEN.

STEP 3 - SET SIGNAL GEN. AT 1620 KC, WITH RECEIVER TUNING GANG OPEN.

STEP 4 - SET SIGNAL GEN. AT 1300 KC, TUNE RECEIVER TO 1500 KC.

UNLESS OTHERWISE DENOTED

CAPACITORS MORE THAN 1 • mmf
CAPACITORS LESS THAN 1 • mf
RESISTORS - K • 1,000
- M • 1,000,000

D.C. VOLTAGES AT 117V LINE TO B— W/ 20,000 Ω/VOLT METER

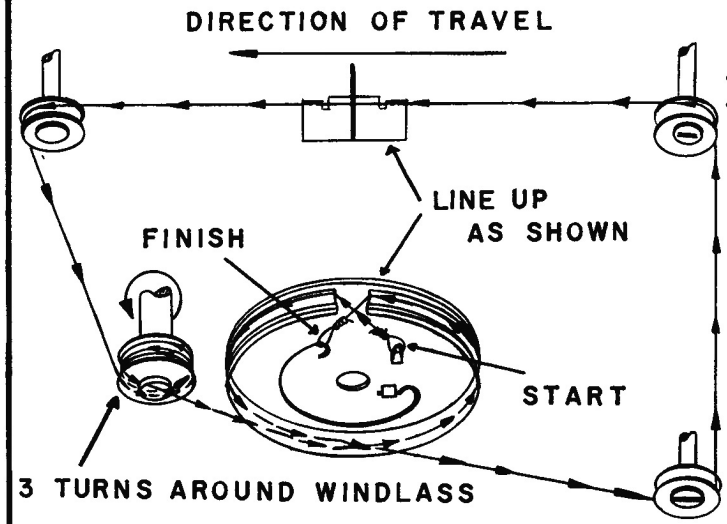

STRINGING DIAGRAM

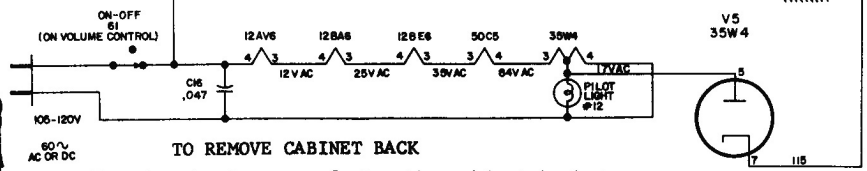

TO REMOVE CABINET BACK

Four hex-head screws fasten the cabinet back to the cabinet front. Two are located in the recessed hand-grip, and two on the lower rear edge of the cabinet. Remove these screws and pull out the interlock plug to remove the back.

TO REMOVE CHASSIS

Four hex-head screws fasten the cabinet back to cabinet bottom, two fasten the volume control to the cabinet front, and one fastens the antenna bracket to the cabinet front. Remove these screws and the volume control knob.

The dial drum is captive and remains on the cabinet front. The tuning gang shaft will slide out of the dial drum when the chassis is pulled out of the cabinet.

When replacing the chassis, be sure to line the flat side of the gang shaft up with the flat side of the dial drum hole. This will allow the gang shaft to enter the dial drum.

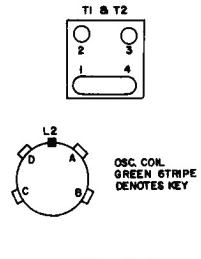

GENERAL ELECTRIC

MODELS T165A, T166A