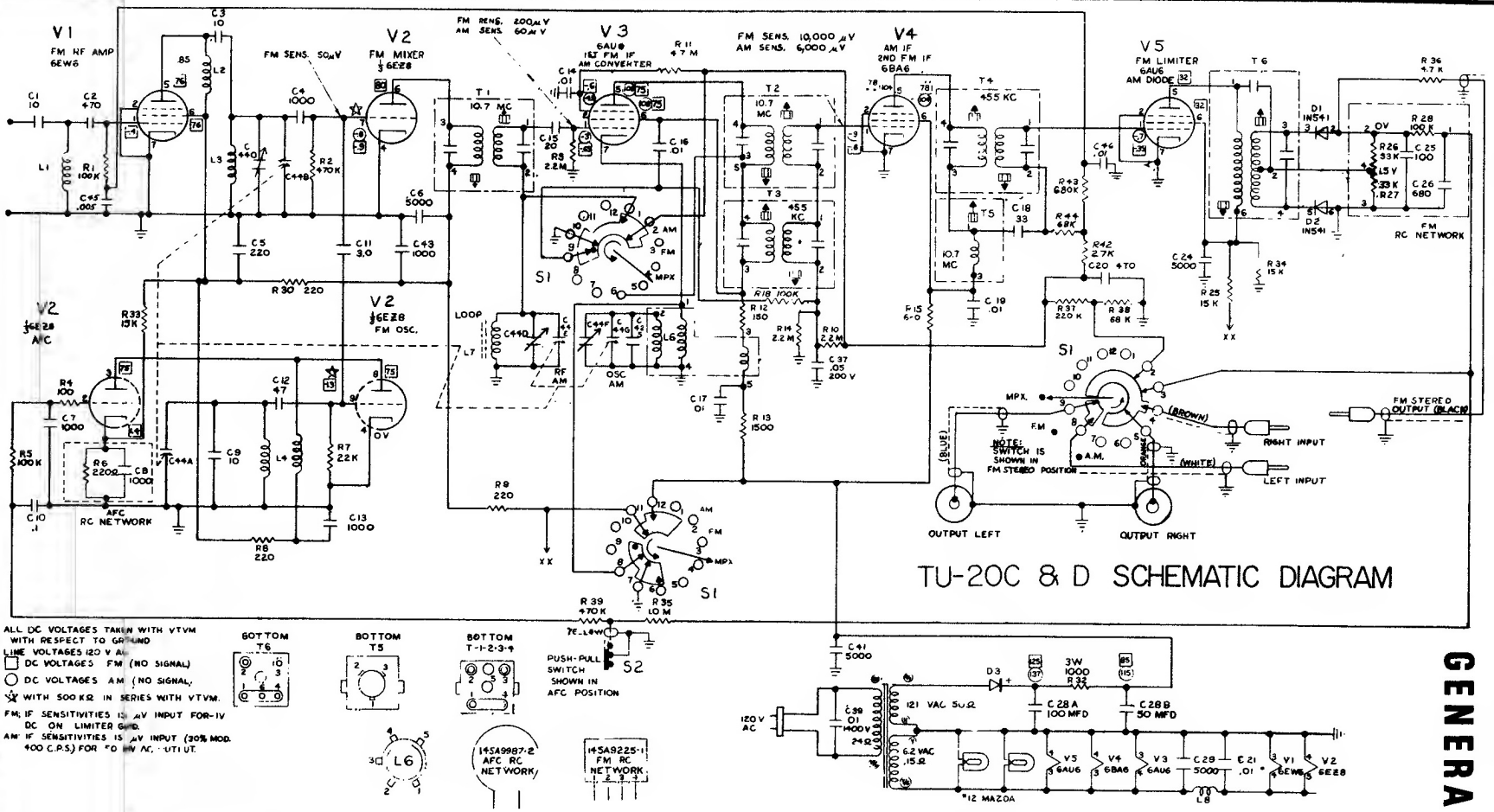


The basic Tuner TU-20 design consists of five tubes. All versions have two controls: (1) a TUNING control for selection of AM or FM stations (2) a SELECTOR control with AM, FM and FM (AFC) positions. Tuner versions (TU-20C, D) have four positions on the selector control (AM, FM, FM STEREO and FM (AFC). The FM (AFC) on the four position SELECTOR control is actuated by a push-pull switch mounted on the SELECTOR control.

To eliminate signal overloading, an AGC circuit is being incorporated in the TU-20 tuners and is identified by the code A-31 stamped on the tuner chassis.

To incorporate AGC in the tuners in the field, requires the removal of R16 and the addition of five (5) components to the circuit. These components are designated on the schematics as R42, R43, R44, C45 and C46.

Also incorporated in the TU-20 tuners is the resistor R18, a 100K ohms. This is to widen the IF band width required for FM Stereo reception. Solder this resistor to bottom side of the chassis board because of the space limitations on the top.

GENERAL ELECTRIC

# TU20 TUNER