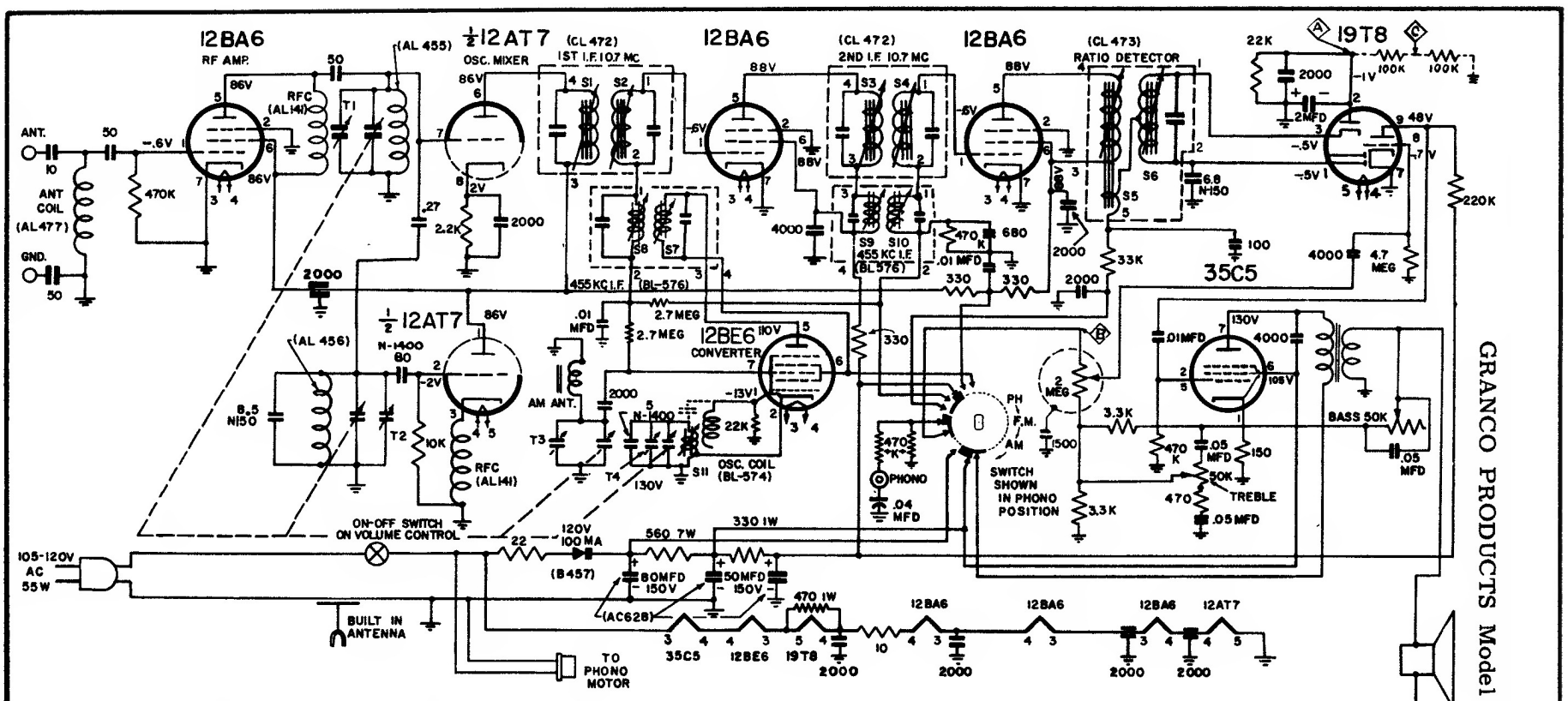

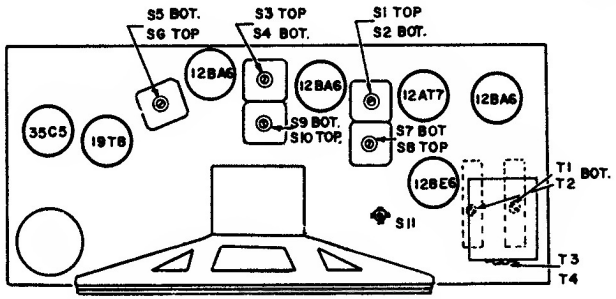

TUBE LAYOUT & TRIMMER LOCATION

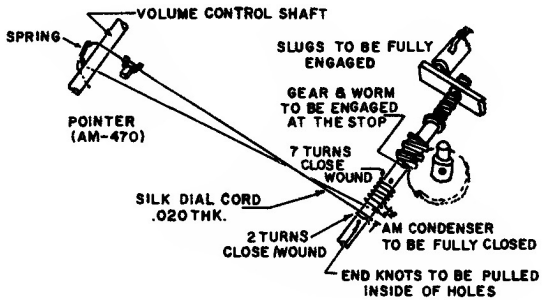

STRINGING DIAGRAM

NOTES-

ALL RESISTORS 1/2 WATT 20% UNLESS OTHERWISE SPECIFIED
ALL CONDENSER VALUES IN MMF UNLESS OTHERWISE SPECIFIED
GRANCO PART NO. SHOWN IN (-)

CONDITIONS FOR MEASURING VOLTAGES

ADJUST LINE VOLTAGE TO 117 V.
NO SIGNAL INPUT ON F.M.
USE VTVM
ALL VOLTAGES MEASURED WITH RESPECT TO CHASSIS GROUND

GRANCO PRODUCTS INC.

MODEL 750 AM-FM