MODELS 51C1, 51C1A, 51C2 & 51C2A

the hallicrafters

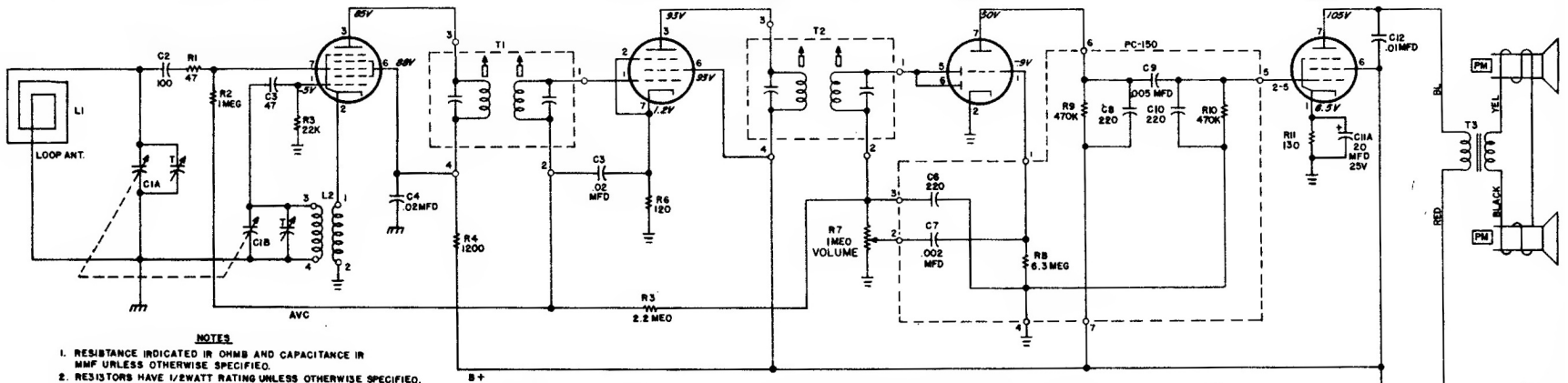

NOTES

1. RESISTANCE INDICATED IN OHMS AND CAPACITANCE IN MMF UNLESS OTHERWISE SPECIFIED.
2. RESISTORS HAVE 1/2WATT RATING UNLESS OTHERWISE SPECIFIED.
3. INTERMEDIATE FREQUENCY = 455 KC.
4. LINE VOLTAGE-117VOLTS 60~ AC.
5. ALL VOLTAGES ARE MEASURED WITH A VACUUM TUBE VOLTMETER (VTVM) AND ARE DC AND POSITIVE UNLESS OTHERWISE SPECIFIED.
6. ALL VOLTAGES ARE MEASURED BETWEEN TUBE SOCKET TERMINALS AND B-(⏚). POINT X
7. K = 1000
8. ⏚ INDICATES CHASSIS CONNECTION.

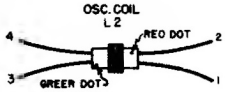

VALUES AND TOLERANCES SHOWN ARE NOMINAL AND VARIATIONS MAY BE FOUND. IT IS RECOMMENDED THAT THE VALUE OF ANY REPLACEMENT CORRESPOND TO THE NOMINAL VALUE OF THE PART BEING REPLACED.

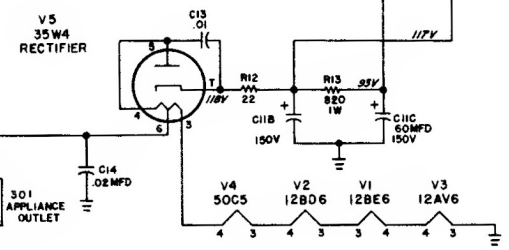

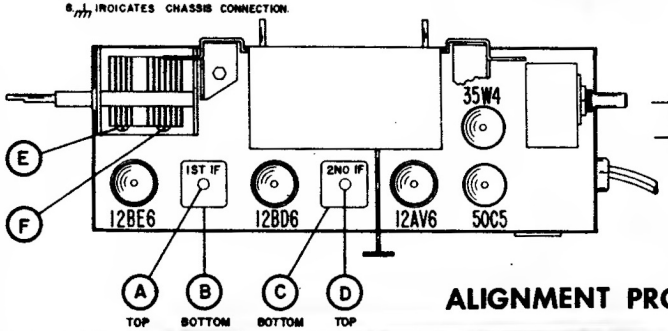

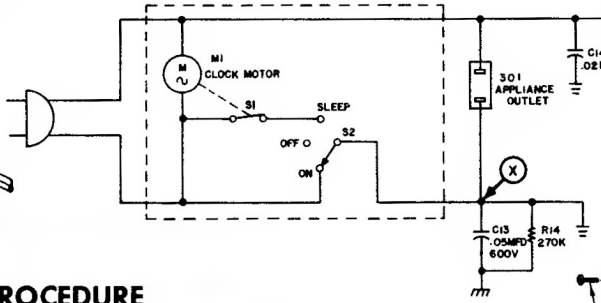

ALIGNMENT PROCEDURE

Step	Signal Generator Connections	Generator Frequency	Receiver Dial Setting	Adjust
1	High side thru .1 mfd. capacitor to stator plates of oscillator section of tuning gang. Low side to B-. (point X).	455 KC	1000 KC	A-B (1st IF) and C-D (2nd IF)
2	Construct a loop of a few turns of wire and connect it to the signal generator. Loosely couple this loop to the loop antenna of the receiver.	1620 KC	Tuning gang fully open.	E (osc. trimmer)
3	Same as Step 2.	1400 KC	1400 KC	F (ant. trimmer)
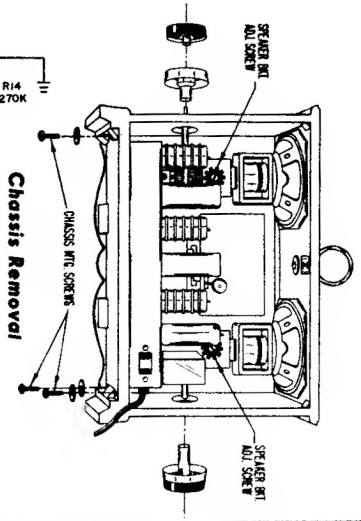
Chassis Removal