hallicrafters MODEL 5R24

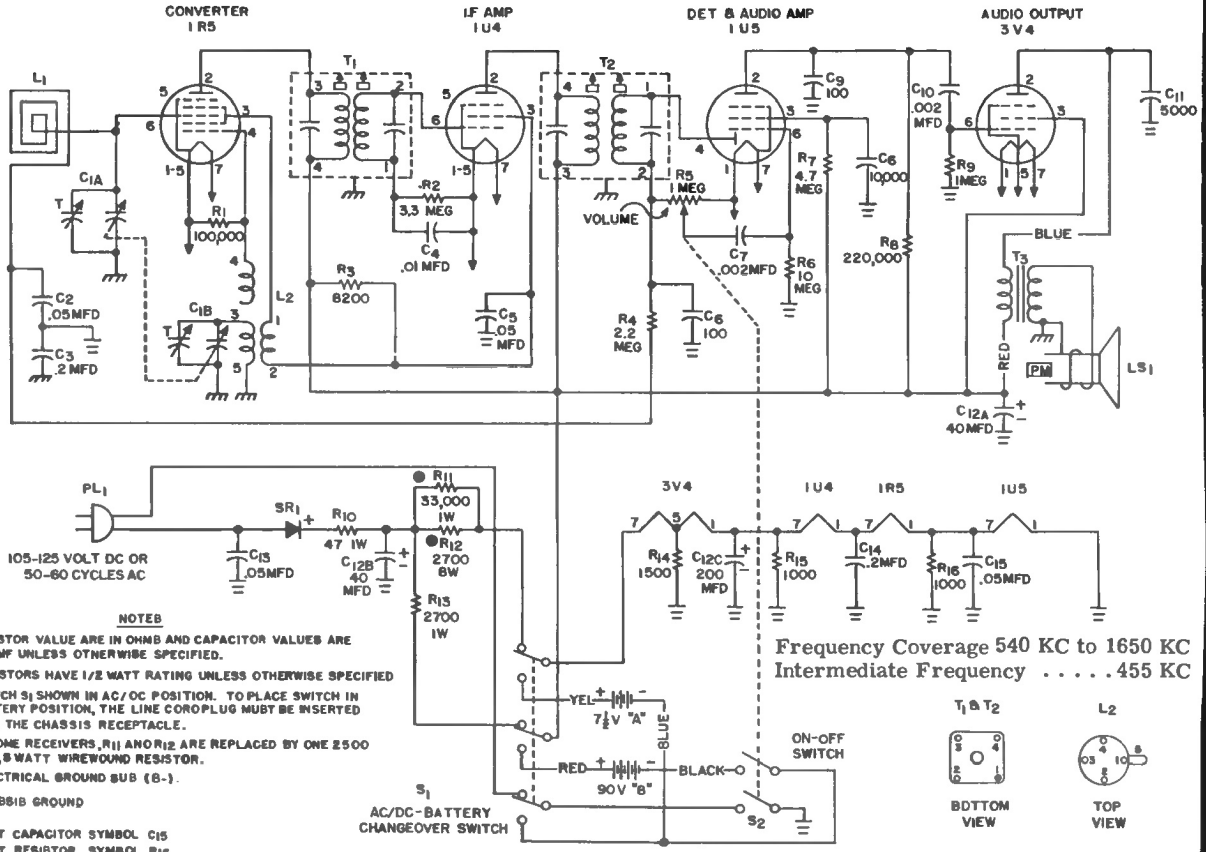

NOTES

1. RESISTOR VALUE ARE IN OHMS AND CAPACITOR VALUES ARE IN MMF UNLESS OTHERWISE SPECIFIED.
2. RESISTORS HAVE 1/2 WATT RATING UNLESS OTHERWISE SPECIFIED
3. SWITCH S1 SHOWN IN AC/DC POSITION. TO PLACE SWITCH IN BATTERY POSITION, THE LINE CORDPLUG MUST BE INSERTED INTO THE CHASSIS RECEPTACLE.

● IN SOME RECEIVERS, R11 AND R12 ARE REPLACED BY ONE 2500 OHM, 8 WATT WIREWOUND RESISTOR.

⏚ ELECTRICAL GROUND SUB (B-).

CHASSIS GROUND

LAST CAPACITOR SYMBOL C15
LAST RESISTOR SYMBOL R16

Frequency Coverage 540 KC to 1650 KC
Intermediate Frequency . . . . . 455 KC

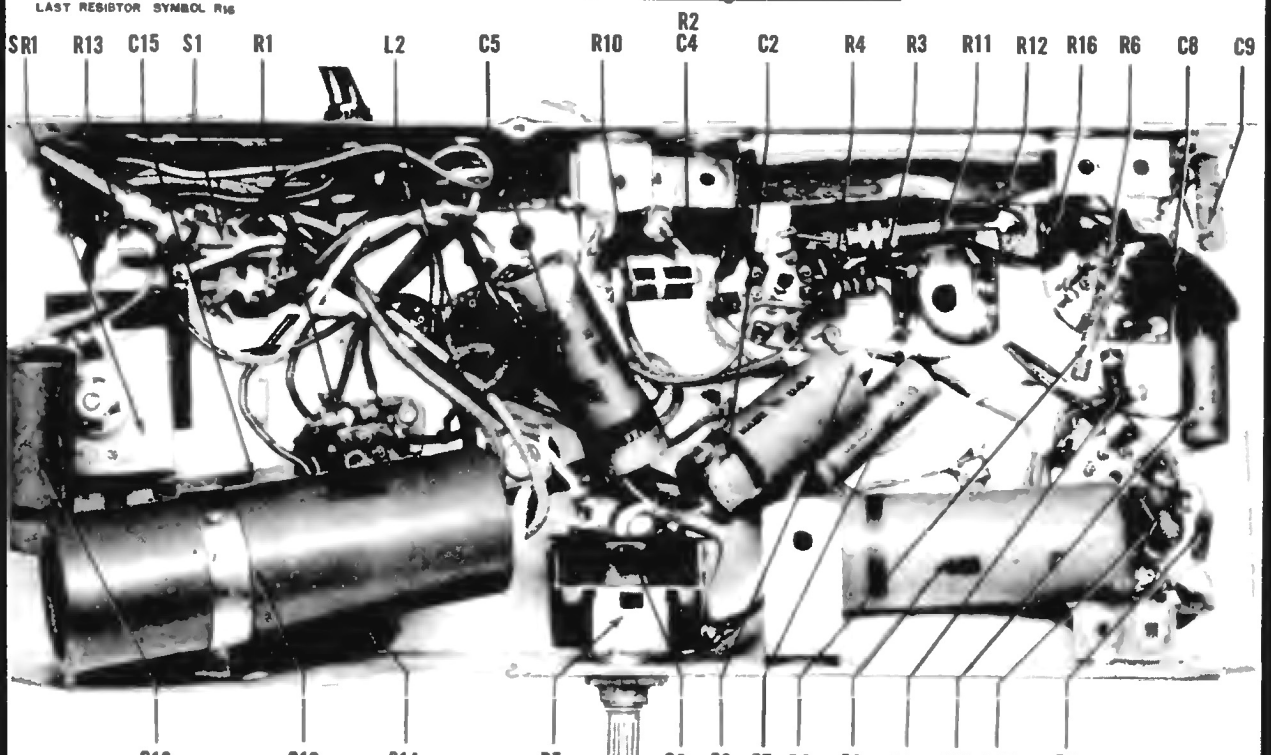

Bottom View of Chassis Showing Component Location