SERVICE MANUAL

MODEL *Eight Twenty*

PREAMPLIFIER

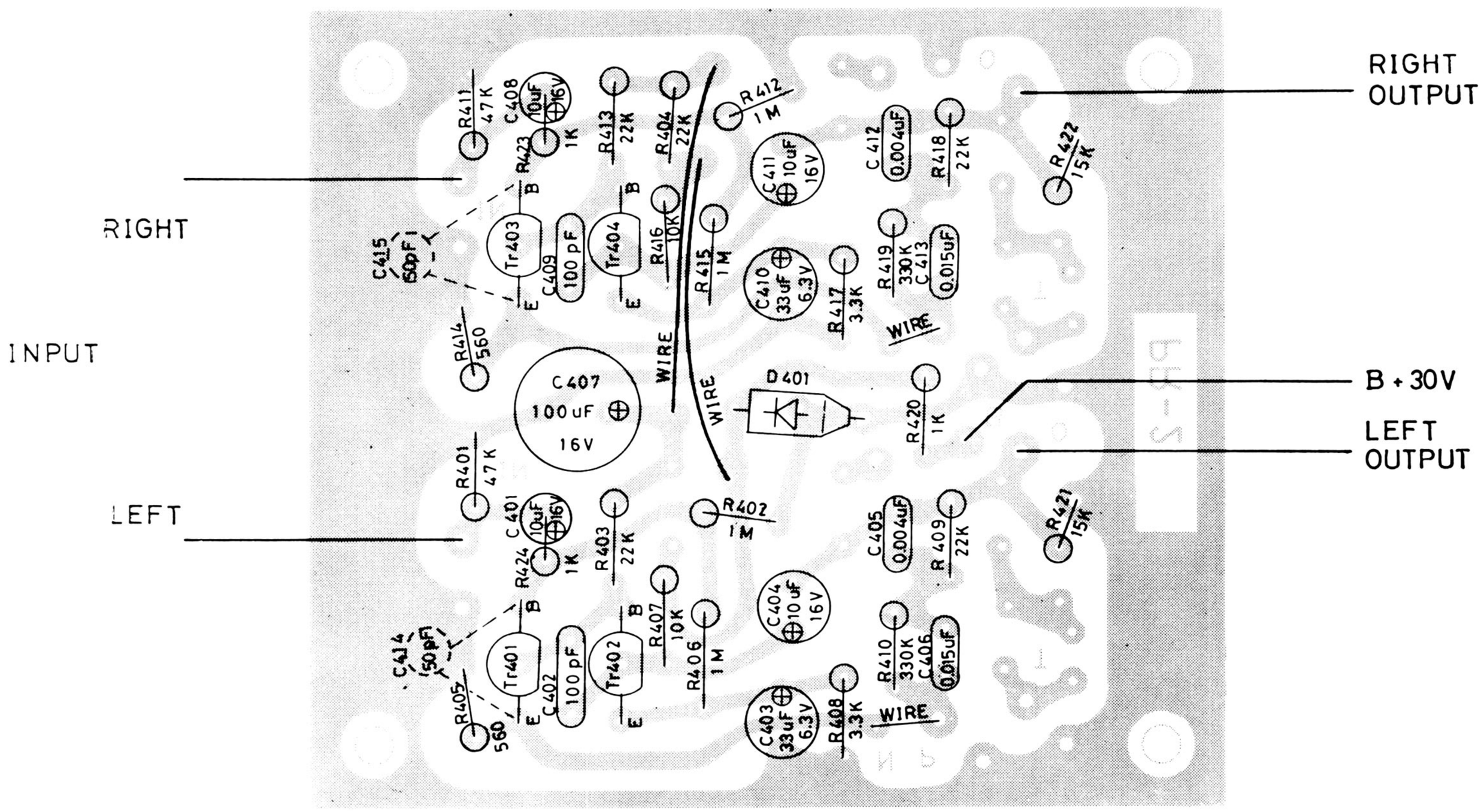

"AF-4A" AUDIO MAIN AMPLIFIER

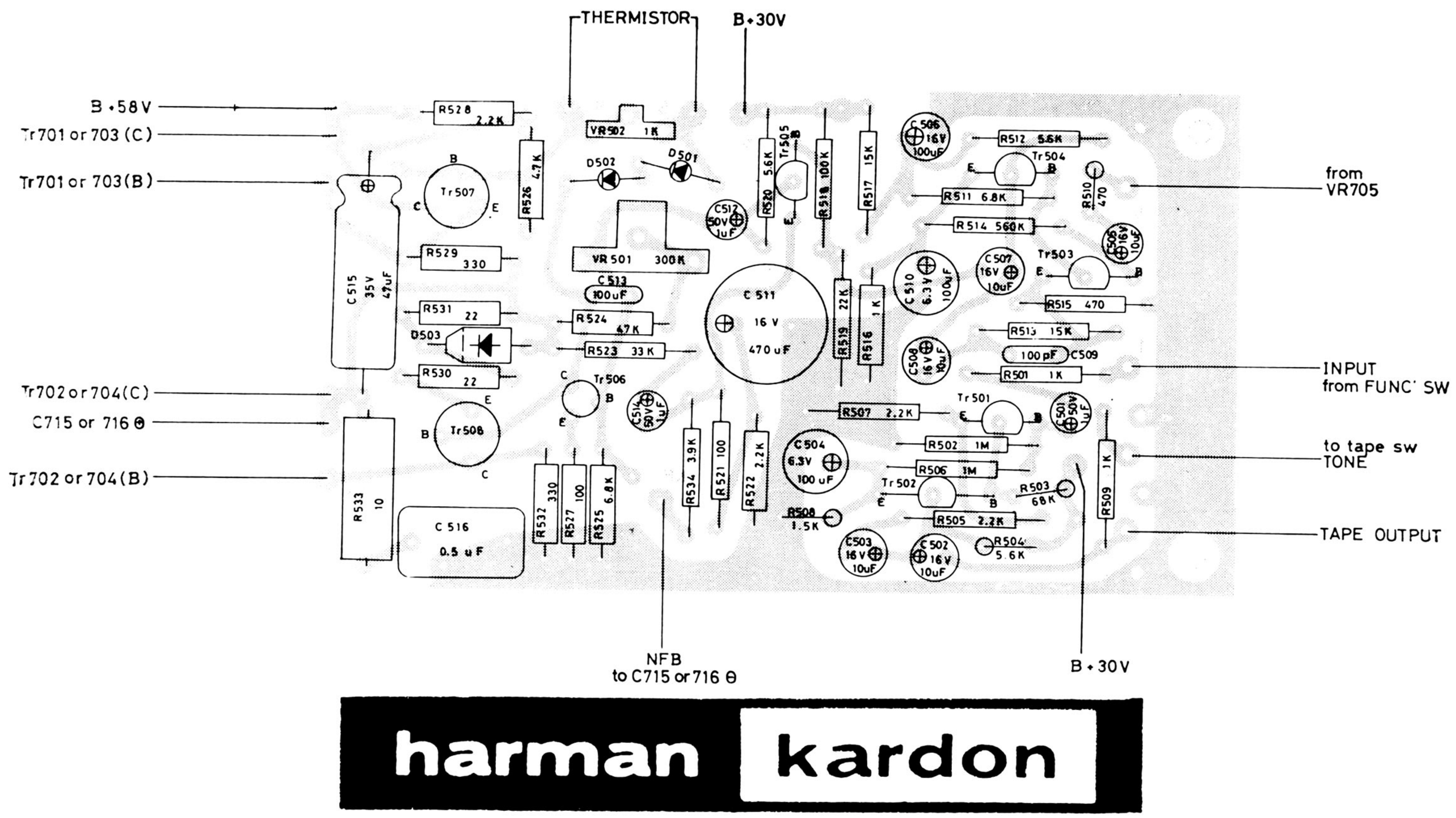

harman kardon

CIRCUIT DIAGRAM FAJ15

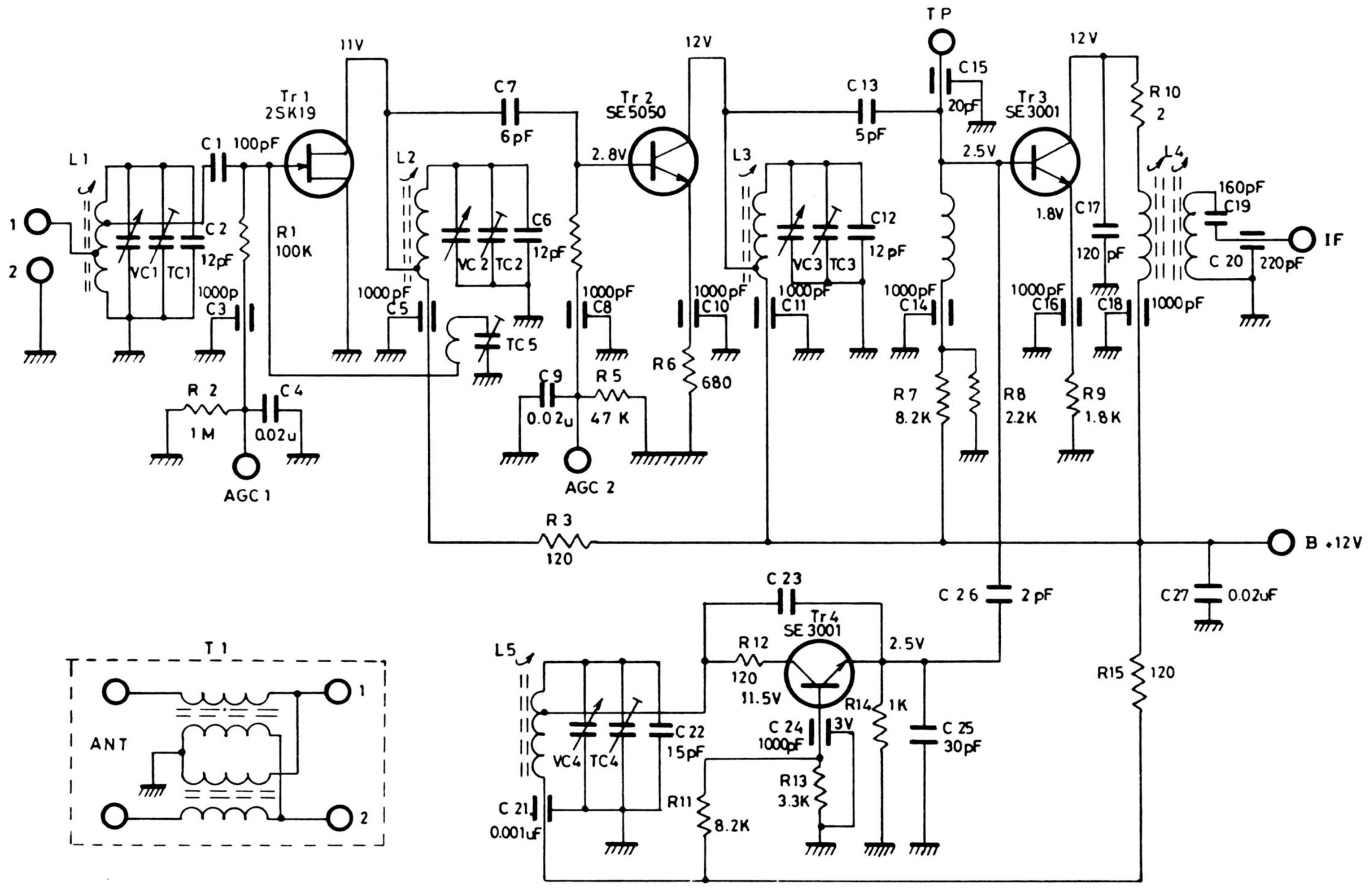

TOP VIEW FAJ15

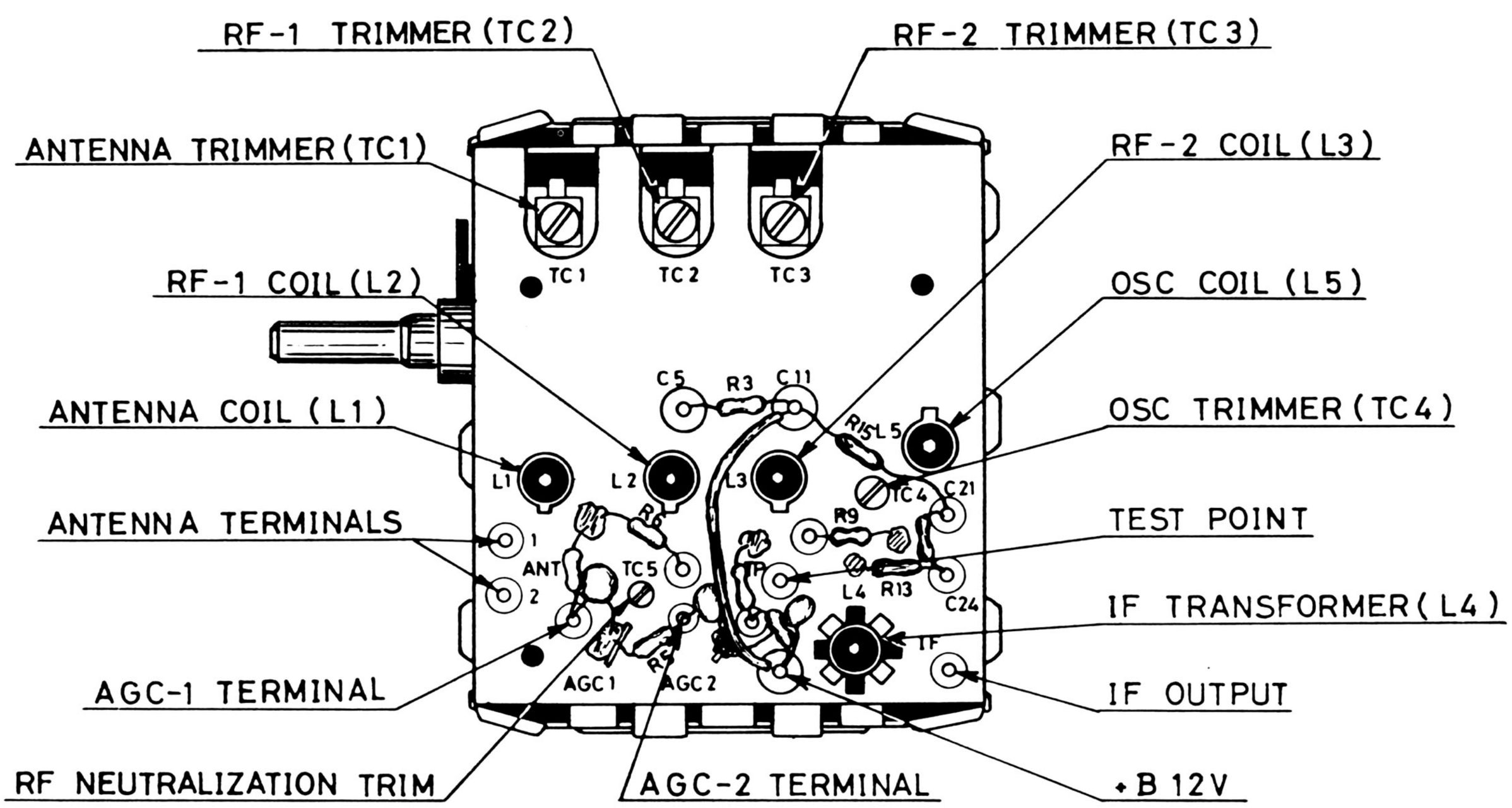

FM IF AND MPX-ALIGNMENT

1. Connect MPX input terminal to the audio frequency generator, and send in 67 kHz signal wave (minimize the input level within the adjustable range). Connect oscilloscope lead to TP1. Adjust L302 to keep 67 kHz output minimum. Reset the generator frequency to 72 kHz, and adjust L303 to keep this output minimum.

2. Connect tuner IF output terminal to the FM signal generator. Set the generator to 10.7 MHz 100% modulated 30 — 100 μV. Connect the oscilloscope lead to TAPE OUT. Adjust capacitors (C142, C141, C140, C139) of Xtal Filters and primary and secondary discriminator (T101) for maximum response curve on the scope (FM generator output signal should be as small as possible).

3. Connect 1 kHz 100% modulated stereo generator to antenna terminal of the receiver. Adjust capacitors (C142, C141, C140, C139) and the Tuning Dial of the receiver for the stereo composite response (of the T101's detector output) to be like that in Fig. 1.

4. Connect the oscilloscope lead to TAPE OUT and adjust MPX circuit (T302, T301, L301, VR303, VR302) for maximum stereo separation.

5. Connect stereo modulated FM signal generator to the receiver. Adjust capacitors (142, C141, C140, C139) and the Tuning Dial accurately for distortion to be within 2% at the inputs of 100 μV — 10 mV. Adjust the secondary discriminator (T101) for the tuning meter to read zero. Adjust VR301 for a stereo inidcator lamp to be brightest at 5% pilot signal modulation.

6. Switch signal generator modulation to mono. Adjust primary discriminator (T101) for the lowest possible distortion (within 1%) at 1 mV input. Using the attenuator, adjust the primary and secondary IFT (L4) of the tuner for the highest IHF sensitivity above 3 μV.

7. Switch the modulation to stereo. Adjust VR101 for the stereo auto switching threshhold to work at 30 μV — 60 μV.

8. Switch the modulation to stereo. Adjust VR701 for the muting to work at 10 μV — 20 μV.

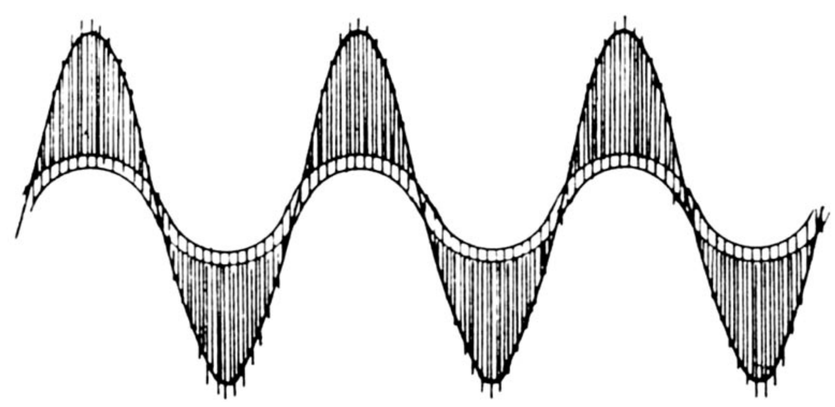

Fig 1 composite wave

FM-RF ALIGNMENT

1. Set dial pointer to zero (0) calibration mark on logging scale. If dial pointer dose not coincide with the 0 without forcing the tuning knob, reposition pointer assembly on the dial cord and cement pointer in place.

2. Connect AC VTVM to right or left TAPE OUT jack.

3. Connect FM Signal Generator to the antenna terminals.

4. Set generator frequency and tuning dial to 90 MHz. First adjust the oscillator core. Then, adjust the RF and ANT coil cores for maximum VTVM reading.

5. Set generator frequency and tuning dial to 106 MHz. First adjust oscillator trimmer. Then, RF and ANT coil trimmers for maximum VTVM reading.

6. Repeat steps above several times until accurate dial calibration is obtained where VTVM reading is maximum.

* Keep the generator output as low as possible during all adjustment.

PREDRIVER/DRIVER ALIGNMENT

1. Set Balance, Bass and Treble controls to their center position.

2. Set Mode switch to "STEREO", Speaker switch to "SYSTEM-1" and Selector switch to "AUX".

3. Connect 8 ohm (50W) resistor across left speaker terminals in parallel with the load resistor, connect the vertical input leads of the oscilloscope.

4. Connect an audio generator, set for 1000 Hz (sine wave), to the left AUX jack.

5. Connect AC power cord and rotate volume control in clockwise position . . . full volume. Increase generator output until sine wave on the scope just starts clipping. Adjust DC balance VR501 for equal clipping on the positive and negative half cycles of the signal.

6. Adjust crossover distortion, adjust VR502 until the crossover is extinguished [rotate volume control to counter clockwise position to get 0.1 watt (0.9 RMS) output]. Or adjust idling current, using a DC mA meter, rotate VR502 to obtain a 40 mA reading on DC mA meter (no signal input).

7. Repeat preceding steps for right channel.

www.hifiengine.com

TOP VIEW

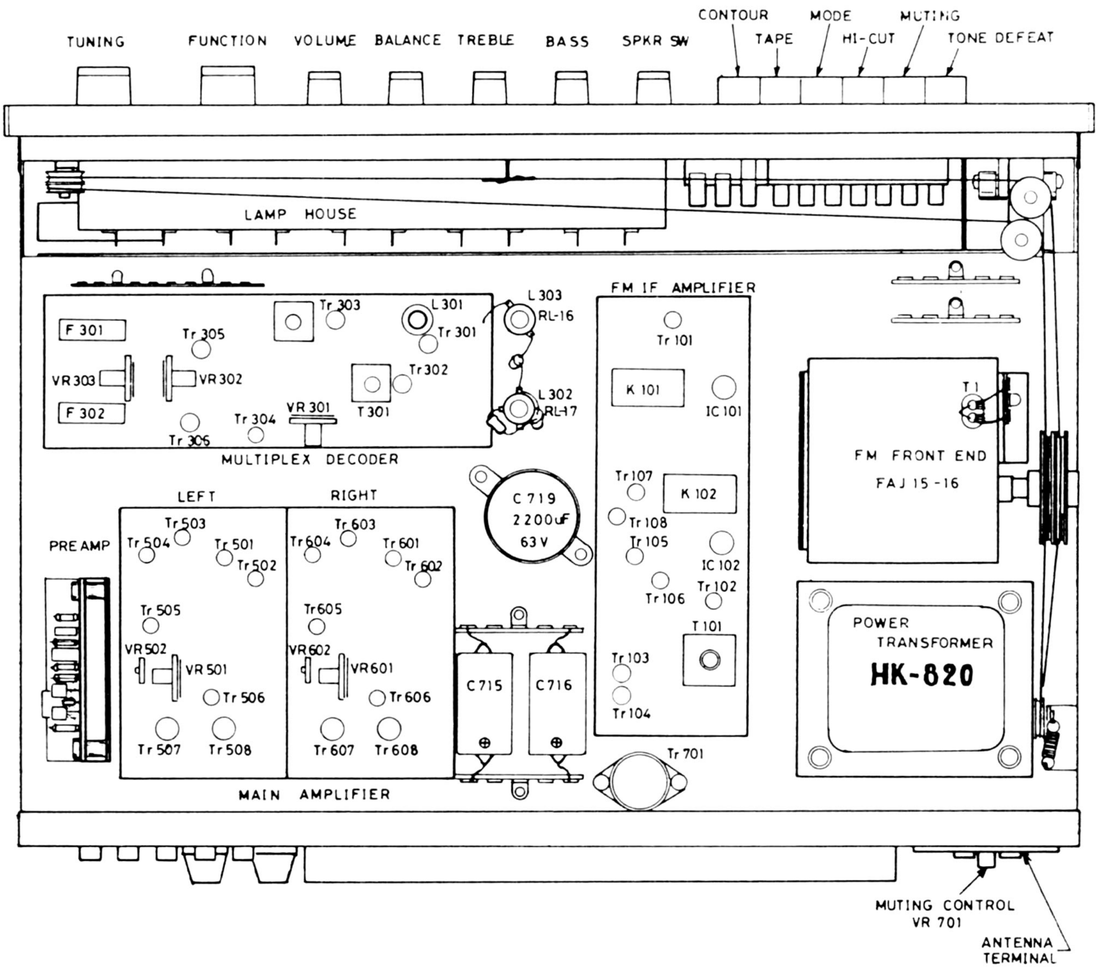

BOTTOM VIEW

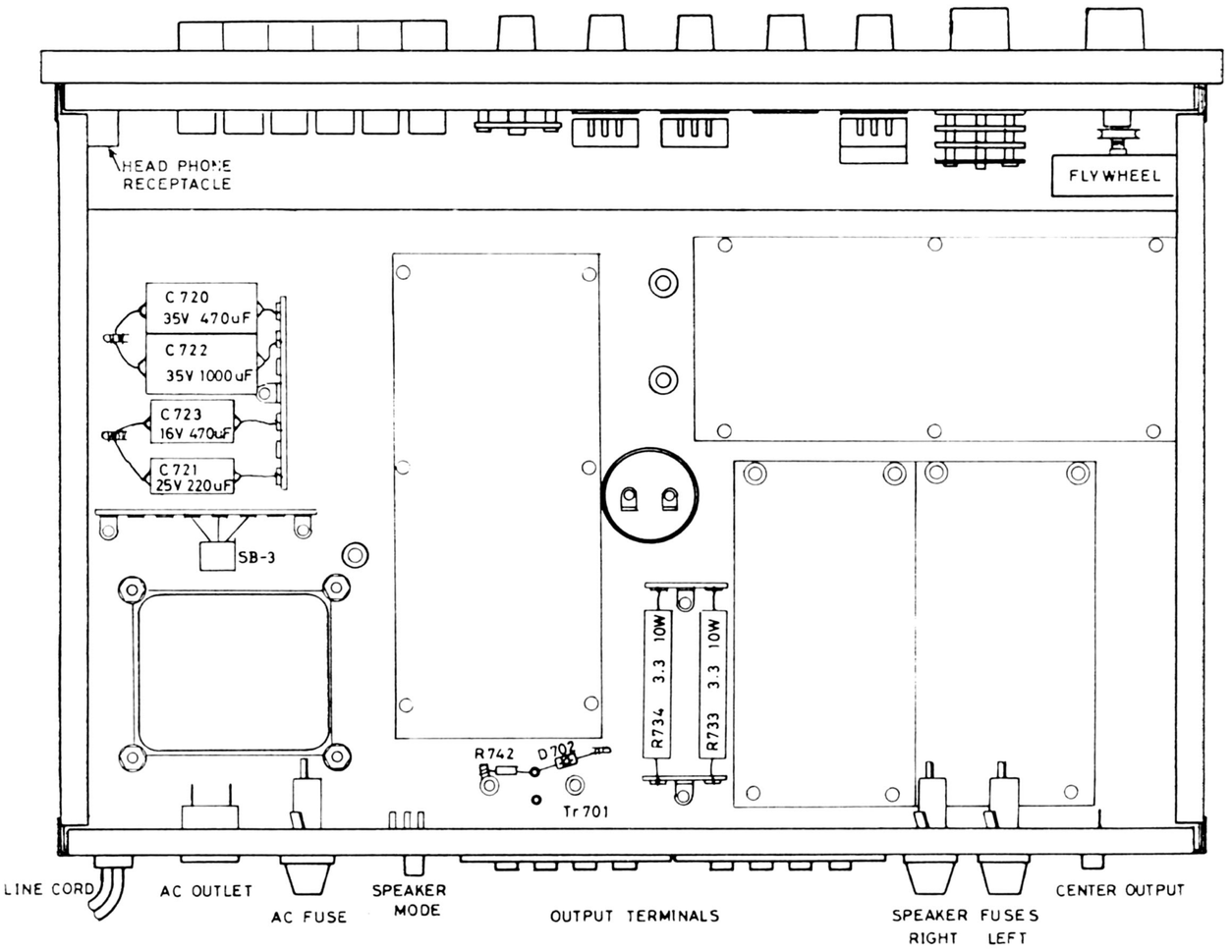

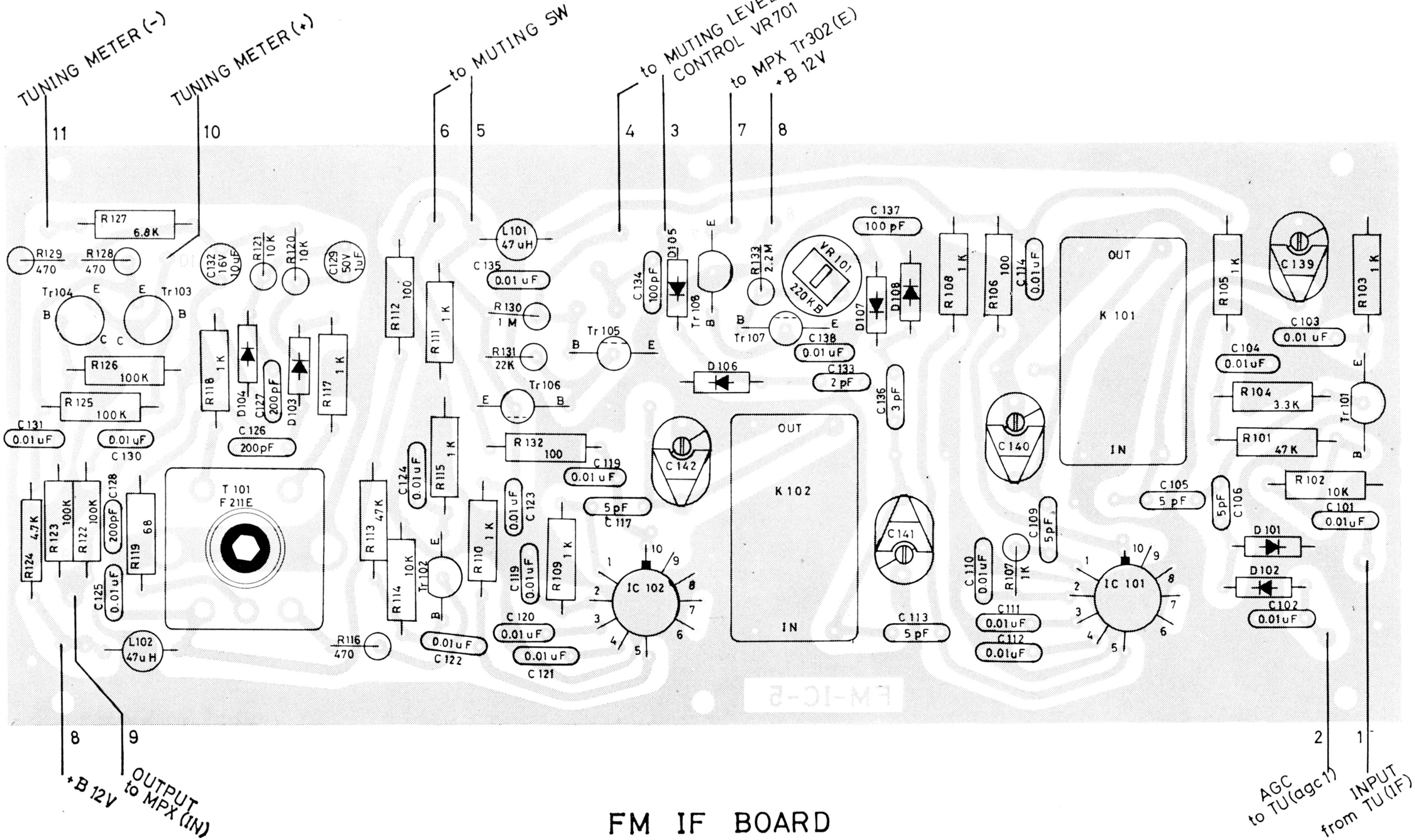
TUNING METER (-)
TUNING METER (+)
to MUTING SW
to MUTING LEVEL CONTROL VR701
to MPX Tr302(E)
+B 12V
11
10
6
5
4
3
7
8
R127 6.8K
R129 470
R128 470
C132 16V 10uF
R121 10K
R120 10K
C129 50V 1uF
Tr104
Tr103
R126 100K
R125 100K
C131 0.01uF
C130 0.01uF
R118 1K
D104
C127 200pF
D103
R117 1K
C126 200pF
R124 4.7K
R123 100K
R122 100K
C128 200pF
R119 68
C125 0.01uF
T 101 F 211E
L102 47uH
R112 100
R111 1K
L101 47uH
C135 0.01uF
R130 1M
R131 22K
Tr105
Tr106
R132 100
C119 0.01uF
C124 0.01uF
R115 1K
R113 47K
R114 10K
Tr102
R116 470
C122 0.01uF
C120 0.01uF
C121 0.01uF
R110 1K
C123 0.01uF
C119 0.01uF
R109 1K
5pF C117
IC 102
C134 100pF
D105
Tr108
R133 2.2M
VR101 220KB
Tr107
C138 0.01uF
D106
C133 2pF
C136 3pF
C137 100pF
D107
D108
C142
OUT
K102
IN
C141
C113 5pF
C140
R108 1K
R106 100
C114 0.01uF
OUT
K101
IN
R105 1K
C139
R103 1K
C103 0.01uF
C104 0.01uF
R104 3.3K
Tr101
R101 47K
C105 5pF
5pF C106
R102 10K
C101 0.01uF
D101
D102
C102 0.01uF
C110 0.01uF
R107 1K
C109 5pF
C111 0.01uF
C112 0.01uF
IC 101
8
9
+B 12V
OUTPUT to MPX (IN)
2
1
AGC to TU(agc1)
INPUT from TU(IF)

FM IF BOARD

SCHEMATIC DIAGRAM

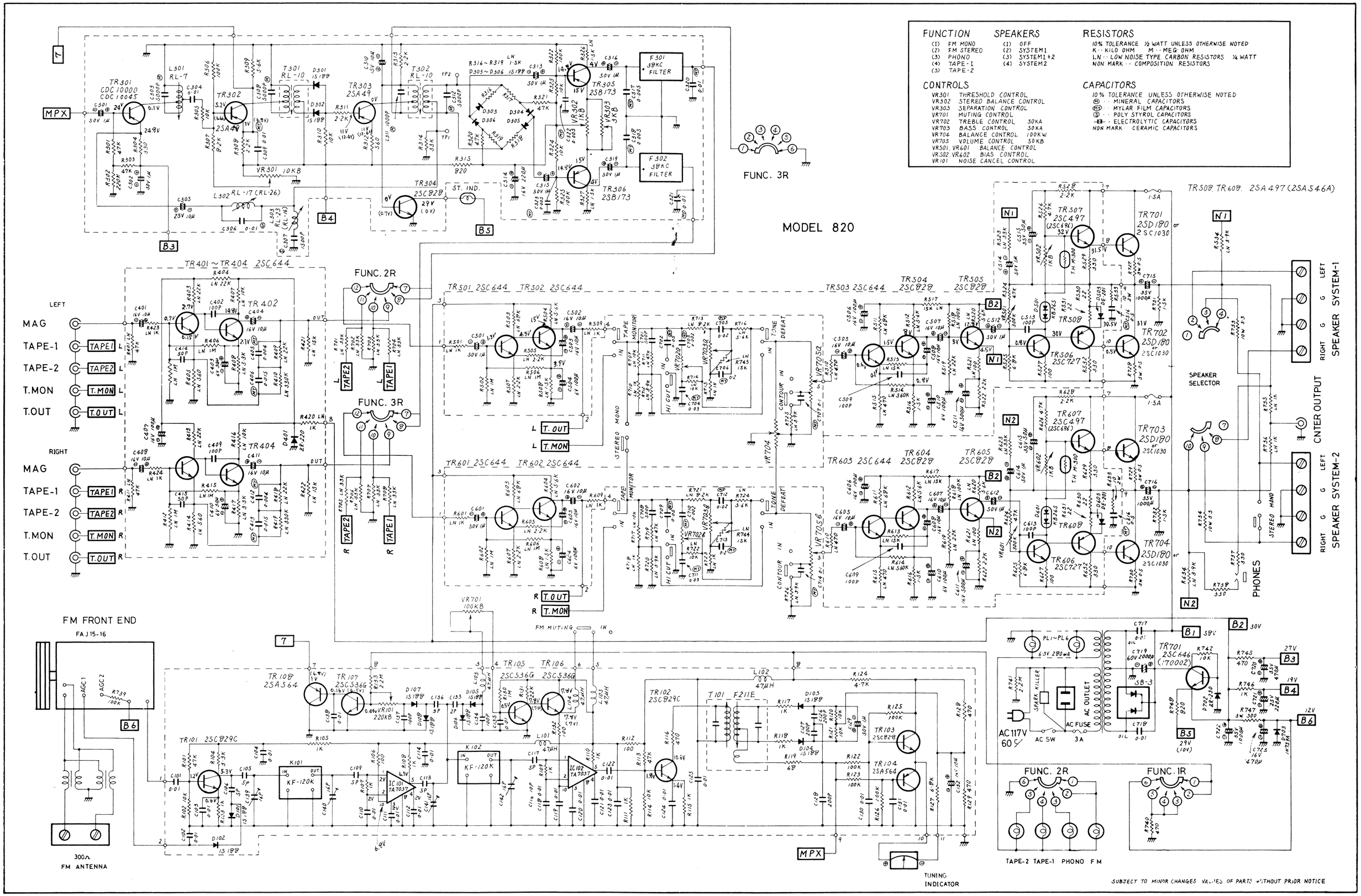

MULTIPLEX DECODER

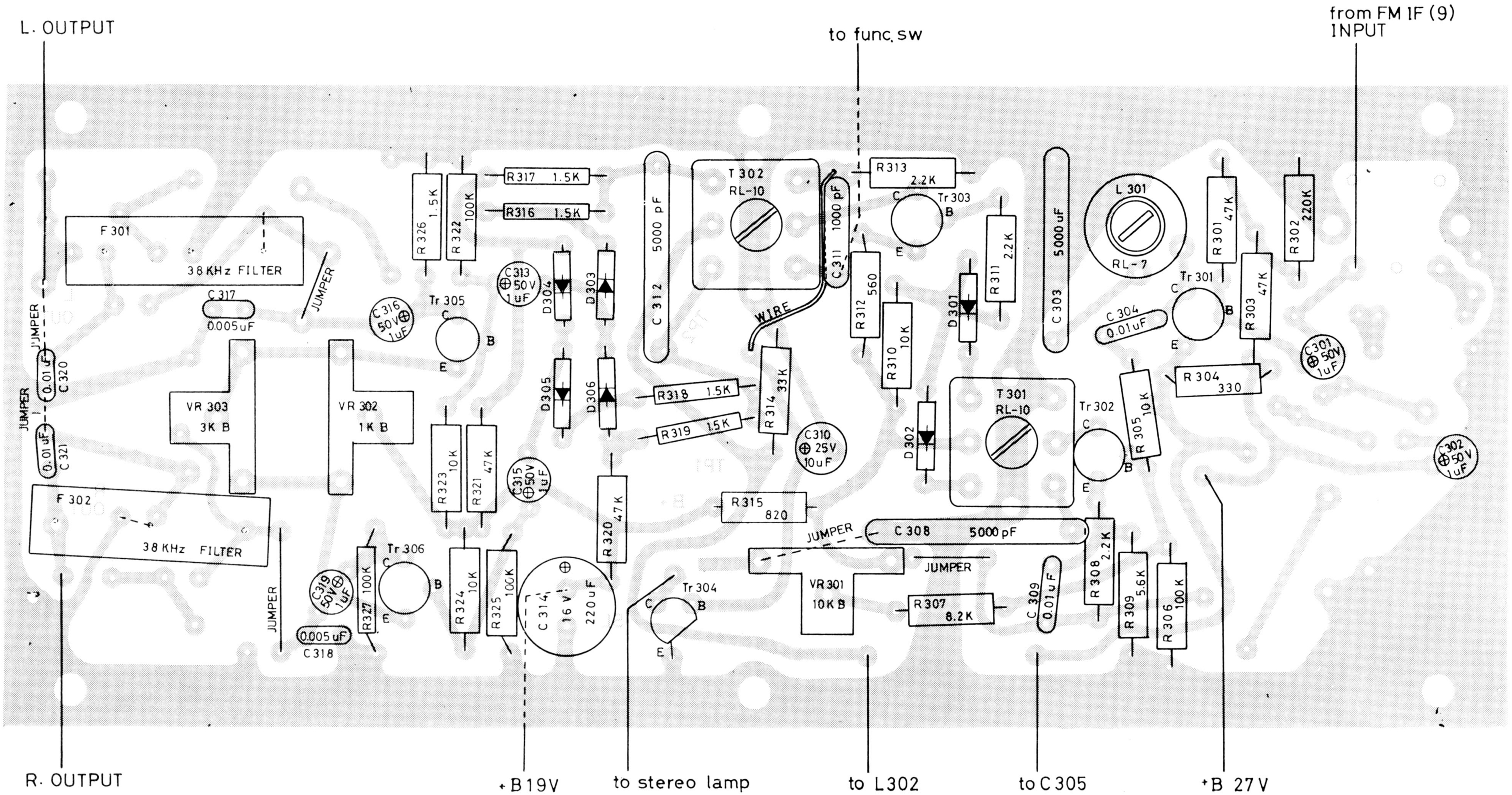

DIAL STRINGING

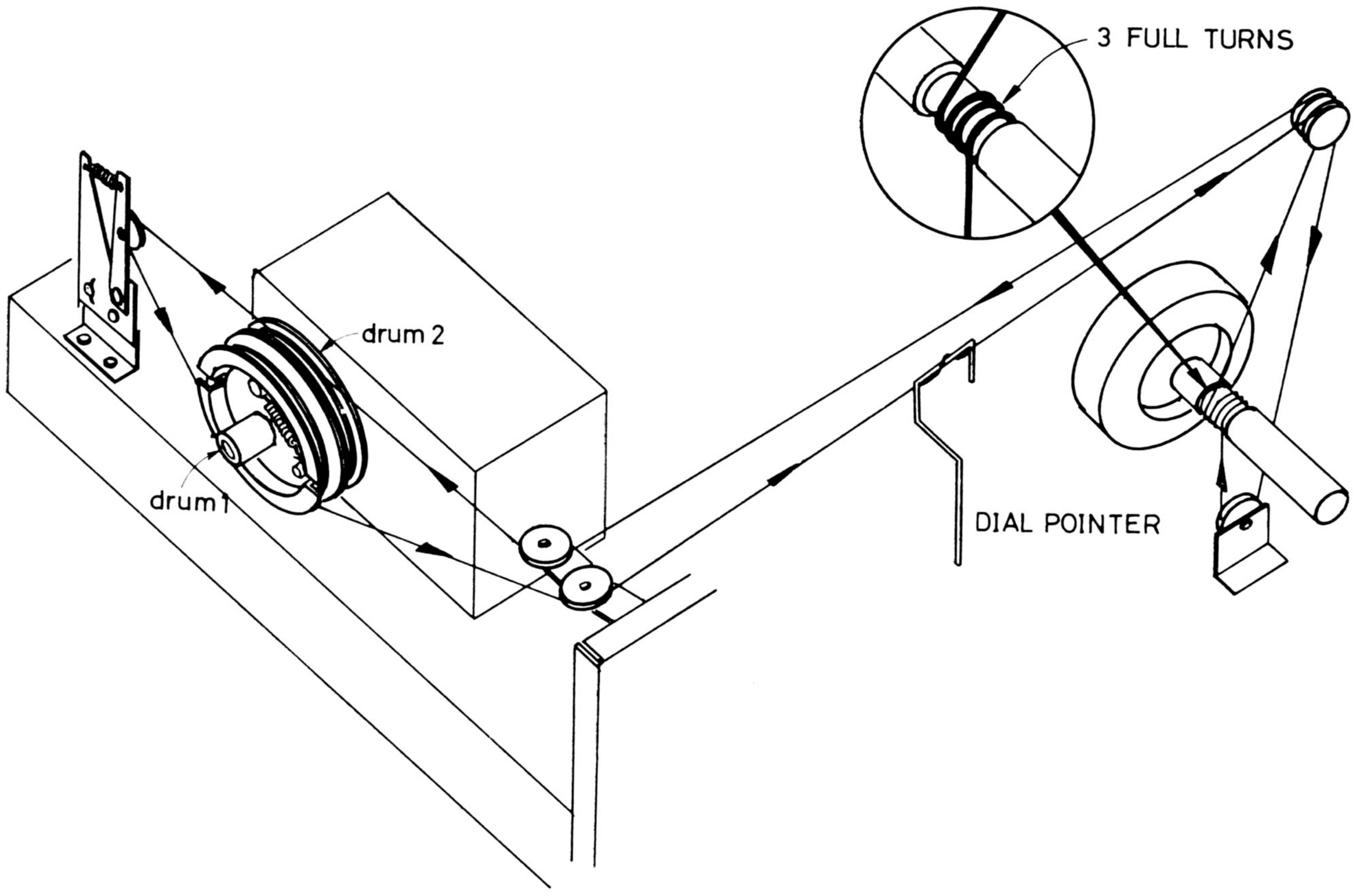

1. Rotate the tuning Capacitor drive-drum to its maximum counter clockwise position.
2. Attach the dial cord to the spring inside the drive-drum 1 as shown in detail drawing (Fig. 2).
3. Run dial cord through slot in rim of the drive-drum.
4. Set dial cord in grove and guide it around the upper pulley, over guide pulley, lower pulley and tuning shaft.
5. Position dial cord on other pulleys and over the top of the drive-drum 2.
6. Pull dial cord taut and wrap 1 turn around the groove of the drive-drum 2 and guide it around the rear pulley and wrap 2 complete turns around the groove of the drive-drum 1.
7. Pull dial cord through slot in the rim of the drive-drum 1.
8. Attach the end of the dial cord to the spring inside the drive drum 1.

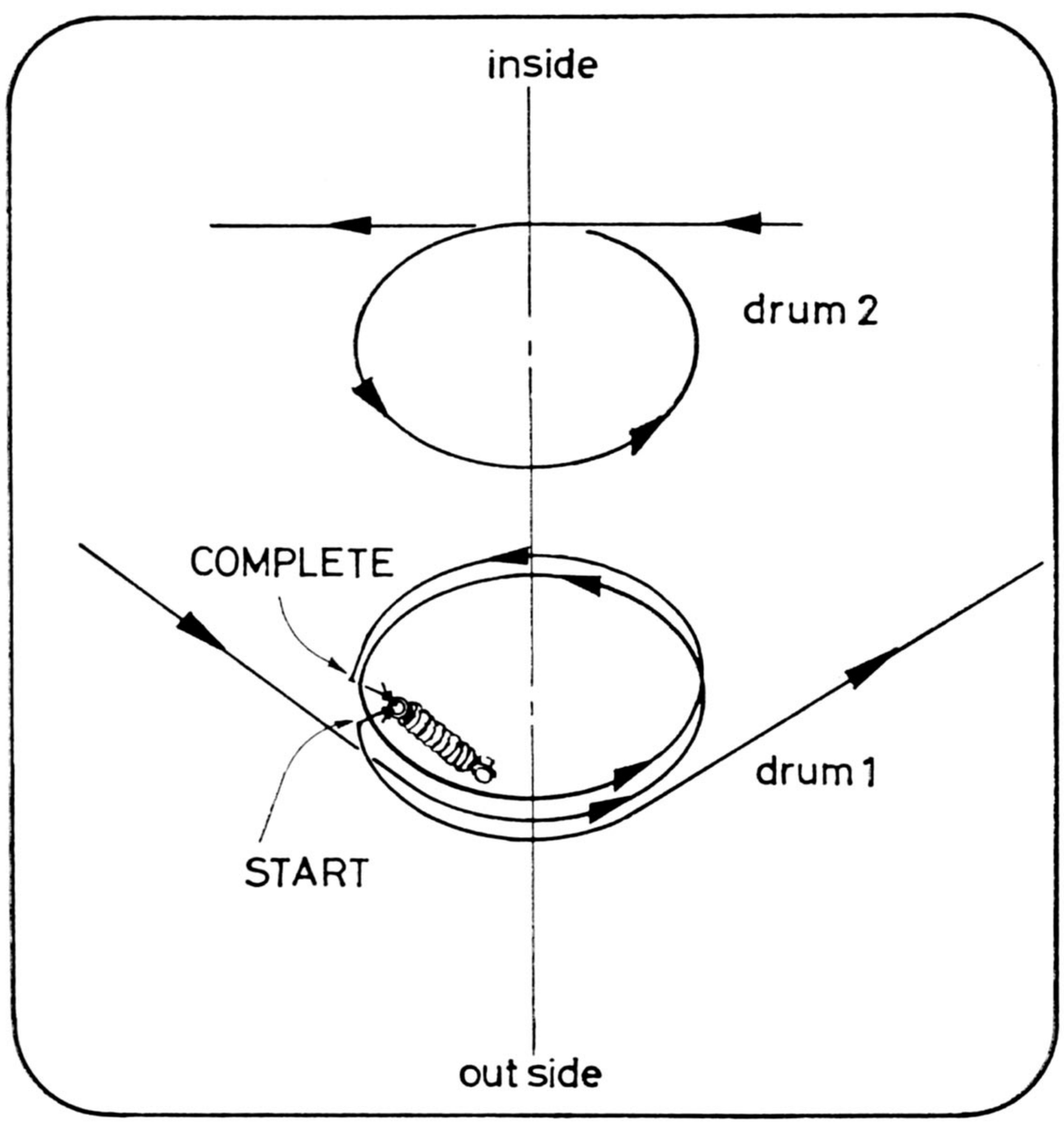

1. When the dial cord slips, at the tuning shaft, move the tension arm to the side.
2. If the flywheel does not rotate freely and smoothly, move the tension arm to the side to reduce tension.

www.hifiengine.com

REPLACEMENT PARTS LIST

TRANSFORMERS and COILS

10125659	L40-1097	Power Transformer
12024855	L05-0009	Coil, Multiplex
12024854	L05-0007	Coil, Multiplex
12025660	L05-0015	72 kHz Filter
12024857	L05-0011	67 kHz Filter
11024831	L04-0013	FM-IFT Ratio Detector
41125661	Z20-003	Crystal Filter 10.7 MHz
12024858	Z20-001	38 kHz Filter

DIODES

42025626	Zener ZR220
42025627	Zener ZR230
41024926	Rectifier SB-3
41624881	Varistor 1S1209
41025628	Varistor 1S188
41025629	Diode DE201
41025630	Thermistor M300

CAPACITORS

31525664	2200 μF 63V	Electrolytic
31525665	1000 μF 35V	Electrolytic
31525666	470 μF 35V	Electrolytic
31525667	370 μF 16V	Electrolytic
31525668	220 μF 25V	Electrolytic
31525669	47 μF 35V	Electrolytic
31525670	470 μF 16V	Electrolytic
30925662	AT1-54	Trimmer

MISCELLANEOUS

24025631	S-1022	Function Switch
24025632	S-1028	Speaker Switch
65425634	E-3001	Antenna Board
65425635	E-3005	Speaker Board
65424896	S-2041	AC Outlet
65424895	S-2032	Fuse Holder
65425636	E-4004	Head Phone Jack
66025637	S-2014	Socket, Power Transistor
26525638	S-1034	Piano Key Switch
60825639	M-2007	Dial, Pulley
60424911	4BG12A	Tuning Shaft
24525642	S-1005	Slide Switch
61225643	S-2031	Lamp Socket
61625644	M-3001	Plastic Leg
60125646	2BS-11A	Enclosure
60725649	3BM-4A	Dial Pointer
63025650	2CP-1	Escutcheon
61625651	CP-7A	Plexiglas, Top
61625652	CP-1	Plexiglas, Bottom

MISCELLANEOUS

63225653	M7117-1	Knob, Tuning
63225654	M7117-2	Knob, Function
63224964	M7118	Knob
12524913	I-1015	Tuning Meter
46524957	M-5003	Pilot Lamp 6.3V 125 MA
46524958	M-5004	Pilot Lamp 10V 20 MA
46524956	M-5002	Pilot Lamp 6.3V 280 MA
00325663	UA-0008	FM Front End
79025679	3 x 6 mm	Screw - Black
79025680	4 x 10 mm	Screw - Black
85525681	4 mm	Washer - Black

CONTROLS

22025671	R31-3062	50 K (Volume)
22025122	R31-1060	50 K (Bass & Treble)
22025672	R30-8072	100 K (Balance)
23525673	R10-201	1 K Stereo Balance
23525674	R10-202	3 K Separation
23525118	R10-206	10 K Stereo Threshold
23525675	R10-210	300 K Output Balance
23525676	R10-002	1 K Output Bias
23525677	R10-003	100 K Muting
23525678	R10-008	220 K Noise Gate

TRANSISTORS

43125611	TA7027M/TA7037M	IC - FM-IF
43024834	2SA49	MPX
43025612	CDC10000 – 1 – D/E	MPX
43025613	2SA497/2SA546A	AF Driver
43025614	2SC497/2SC696A	AF Driver
43025615	2SB405	Meter
43025616	2SD72	Meter
43025617	2SC536G	Muting
43025618	2SC828 (R)	Audio Amp
43025619	2SC644 (S)	Audio Amp
43025620	2SC829 (C)	FM IF
43025621	2SB173 (C)	MPX
43025622	2SA564 (P)	Noise Killer
43025623	2SC727 (D)	Audio Amp
43025624	2SD180 (L)	Power Amp
43025625	B170002/2SC646 (P)	Regulator

RESISTORS

35623011	300 Ω 3W	Metal Oxide
36521001	10 Ω 2W	Bathtub
36625081	0.5 Ω 3W	Bathtub
36923371	3.3 Ω 10W	Bathtub

NOTE: To speed handling of your order be sure to include both the model and serial numbers which appear at the back of the chassis, in addition to the quantity, part number and part description of the items ordered. Orders from independent dealers, independent servicemen, and retail customers will be shipped on a C.O.D. basis. Harman-Kardon reserves the right to substitute equivalent parts for those originally installed in this chassis. All parts should be ordered from Harman-Kardon, Plainview, L.I., N.Y., Att: Parts Department. All prices are subject to change without notice.

www.hifiengine.com

— MEMO —

www.hifiengine.com

— MEMO —

820

HARMAN-KARDON INCORPORATED
55 AMES COURT, PLAINVIEW, N.Y. 11803
SUBSIDIARY OF JERVIS CORPORATION

90725489

www.hifiengine.com