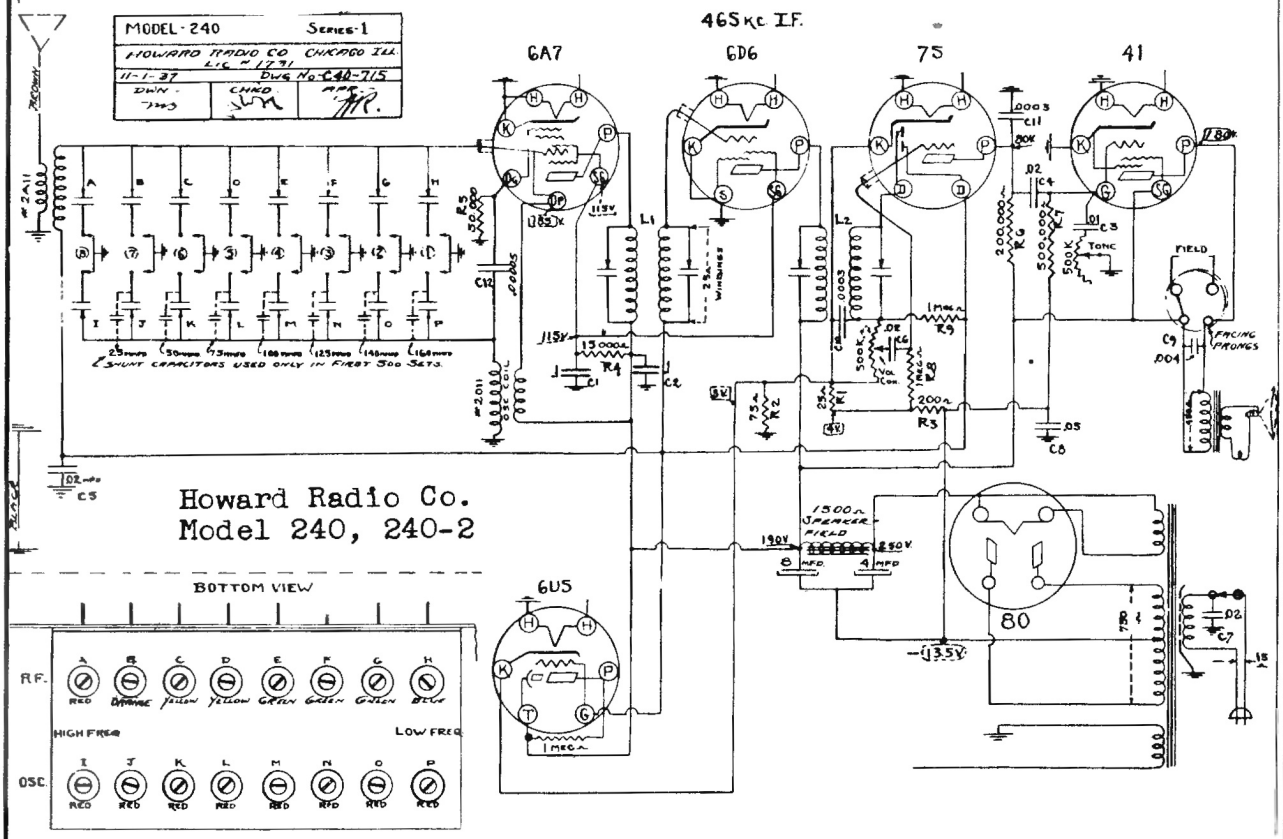

THE MODEL 240 series 1 and 2 is strictly a push-button tuner having no gang condenser. The eight push-button station selectors complete the ground circuit of the oscillator and R. F. tuned condensers previously set to whatever frequency desired. The eight circuits cover the complete range of the broadcast band from 540 to 1750 KC. The instructions for the set-up are shown.

The model 240-1 used the 80 tube for a rectifier and the model 240-2 uses the 1V type tube.

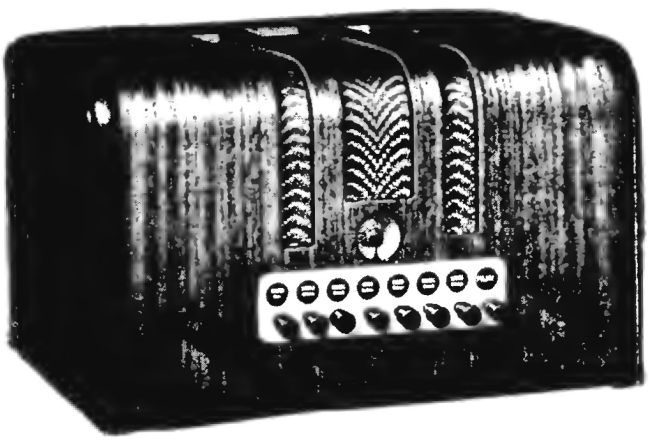

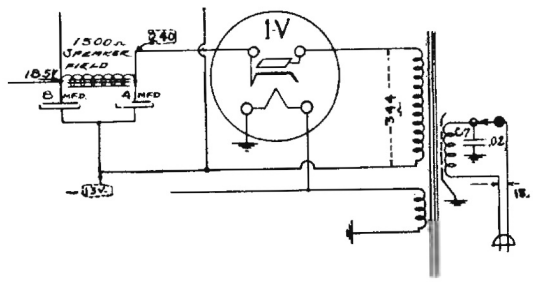

These sets can be easily aligned. The I.F. is set in the regular way. Then one station is tuned-in at a time and adjusted for maximum response. No other adjustments are needed.